Standard Bidding Document

Prequalification of Third-Party Material Inspection Firms for a Three-Year Open Framework Agreement (Tender Enquiry No. GM (QA)-PQTPIF-04) (Non-Consultancy Services)

National

Single Stage-One Envelope

CORRIGENDUM # 2	CORR-FFW9466-002
Initiation Date	September 24, 2026

September 25, 2026

Sui Northern Gas Pipelines Limited (SNGPL) (Sui Northern Gas Pipelines Limited (SNGPL)),Executive Engineer Quality Assurance Department. Ground Floor, LDA Plaza, Edgerton Road., Lahore City, Lahore (District), Lahore Division (Division), Punjab (Province).
Phone: +92-334-278-4499, Email: fahim.solanki@sngpl.com.pk

Table of Contents

Instructions to Applicants 3

Framework Data Sheet 17

Framework Data Sheet (FDS) 18

Framework Items / Lots 22

Eligibility & Qualification Criteria 22

Evaluation Criteria 23

Call-Off / Secondary Procurement Procedure 27

Annexure 29

Standard Bidding Document 30

Annexure A - Contractor Supplier Vendor HSE Statement 30

Annexure B - Third Party Inspection Order TORs 30

Annexure C - Technical Specification of Material 30

Annexure D - Introduction of the Bidder 30

Annexure E - Undertaking for Blacklisting Cross Debarment 30

Annexure F - Bid Securing Declaration 31

Annexure G - Certificate of full Disclosure And Non-collusion 31

Annexure H – Special Conditions of Open Framework Agreement 31

Procurement Forms 33

Contractor's Key Personnel Representative and Their Schedules 1

Past Experience and Completed Contracts 1

Historical Contract Non-Performance, and Pending Litigation and Litigation History 1

Current Contracts and Their Progress 1

Financial Capacity and Net Worth Evaluation Form 1

Additional Forms and Documents 38

INVITATION FOR PREQUALIFICATION FOR OPEN FRAMEWORK AGREEMENT

PROCUREMENT OF NON-CONSULTANCY SERVICES

1. The **Sui Northern Gas Pipelines Limited (SNGPL) (Sui Northern Gas Pipelines Limited (SNGPL))** has sufficient / has received / intends to apply for funds from **Non-ADP** and intends to apply part of such funds toward payments under the Framework Agreement for **Prequalification of Third-Party Material Inspection Firms for a Three-Year Open Framework Agreement (Tender Enquiry No. GM (QA)-PQTPIF-04)** having reference number **FFW9466**.

2. The **Sui Northern Gas Pipelines Limited (SNGPL) (Sui Northern Gas Pipelines Limited (SNGPL))** intends to prequalify suppliers for subsequent Invitation to Bid(s) and to sign a Open Framework Agreement with the successful bidder(s) following completion of the bidding process.

3. The objective of the intended Open Framework Agreement is the on-demand supply of **Prequalification of Third-Party Material Inspection Firms for a Three-Year Open Framework Agreement (Tender Enquiry No. GM (QA)-PQTPIF-04)** through subsequent Call-Off Contract(s) during the Framework Agreement period. The purpose of this Prequalification Notice is to provide basic information to enable potential applicants to decide whether to respond to this Prequalification Notice.

4. Only the prequalified applicants shall be entitled to participate in the subsequent procurement proceedings. It is expected that Invitations to Bid will be issued to the Prequalified Applicants in **Friday, September 18, 2026**. The Open Framework Agreement is expected to be signed with the successful bidder(s) in **Thursday, October 15, 2026** for a period of **36 Months**.

5. The Prequalification process is open to all **National** Applicants subject to fulfilling the eligibility requirements specified in the Prequalification Documents. Interested Applicants may obtain further information from **Sui Northern Gas Pipelines Limited (SNGPL) (Sui Northern Gas Pipelines Limited (SNGPL))** through **EPADS v2.0** during office hours. A complete set of Prequalification Documents may be accessed by interested Applicants

through **EPADS v2.0** at **https://epads.gov.pk/opportunities/federal/framework-agreements/9466**.

6. The application, prepared in accordance with the instructions contained in the Prequalification Documents, must be submitted through **EPADS v2.0** on or before **Monday, October 5, 2026 03:00 PM**. Applications will be opened electronically through **EPADS v2.0** on the same day at **Monday, October 5, 2026 03:30 PM**. Manual submission of applications shall not be entertained.

7. Vendors who have not yet registered on **EPADS v2.0** may complete their registration at **https://vendors.epads.gov.pk/**. Guidance regarding registration and bid submission is available on the portal.

In terms of Rule 48 of Public Procurement Rules, 2004, the Grievance Redressal Committee (GRC) has been notified for the subject procurement. The notification is available on the Procuring Agency's website and on PPRA's website.

Sui Northern Gas Pipelines Limited (SNGPL) (Sui Northern Gas Pipelines Limited (SNGPL))
Executive Engineer
Quality Assurance Department. Ground Floor, LDA Plaza, Edgerton Road., Lahore City, Lahore (District), Lahore Division (Division), Punjab (Province).
+92-334-278-4499
fahim.solanki@sngpl.com.pk

Instructions to Applicants

A. General

1. **Scope of Application**

1.1. In connection with the "**Invitation for Prequalification**", the Procuring Agency, as defined in Section II (Prequalification Data Sheet abbreviated as PDS), issues this set of Prequalification Documents (PD) to prospective applicants (also hereinafter referred as Applicants) interested in submitting applications (also hereinafter referred as Applications) to determine the capacity and capability of the Applicant(s) for supply of Goods and Related Services incidental thereto as specified in Section VII (Schedule of Requirements).

2. **Source of Funds**

2.1. Source of funds is same as referred in Invitation for Prequalification.

3. **Fraud and Corruption**

3.1. The Procuring Agency requires that the Applicants /Bidders/ Suppliers/Contractors under Government financed contracts, observe the highest standard of ethics during the procurement and execution of such agreements and contracts.

3.2. The Applicants/Bidders shall permit and shall cause their agents (whether declared or not), sub-contractors, sub-consultants, service providers, suppliers, and their personnel, to permit the Procuring Agency to inspect all accounts, records and other documents relating to any, Application/Bid submission, Primary Procurement process, Framework Agreement performance, Secondary Procurement process, and/or Call-off Contract performance (in the case of award of a Call-off Contract), and to have them audited by auditors appointed by the Procuring Agency.

3.3. Any communications between the Applicant and the Procuring Agency related to matters of alleged corrupt and fraudulent practices must be made in writing or in electronic forms that provide record of the content of communication.

3.4. Procuring Agency will reject an application or bid or proposal, if it is established that the Applicant or the Bidder or Prosper was engaged in corrupt and fraudulent practices in competing for the contract.

3.5. Procuring Agency will also declare the Applicant as blacklisted in accordance with Public Procurement Rule 19 and predefined standard mechanism.

4. **Eligible Applicants**

4.1. An Applicant may be a private entity, a state-owned enterprise or institution subject to ITB 4.6, or any combination of such entities in the form of a joint venture (JV) under an existing JV agreement or with the intent to enter into such an agreement supported by a letter of intent.
In case of single (private or state-owned entity), it shall be liable for execution of all the provisions of the Framework Agreement (if signed b/w the Procuring Agency and the entity), the execution of any Call-off Contract(s) awarded (to the entity) under the Framework Agreement in accordance with the Call-off Contract conditions that apply.
In the case of a joint venture, all members shall be jointly and severally liable for the execution of all the provisions of the Framework Agreement (if signed b/w the Procuring Agency and the JV), the execution of any Call-off Contract(s) awarded (to the JV) under the Framework Agreement in accordance with the Call-off Contract conditions that apply.
The JV shall nominate a Representative who shall have the authority to conduct all business for and on behalf of any and all the members of the JV during the Prequalification process, Bidding process (in the event the prequalified JV submits a Bid) and during the period of framework agreement and contract execution (in the event the JV is awarded the Contract). Unless specified in the PDS, there is no limit on the number of members in a JV.

4.2. An Applicant may apply for Prequalification both individually, and as part of a joint venture, or participate as a subcontractor. If prequalified as a JV only, it will not be permitted to bid for the same contract as an individual entity. Bids submitted in violation of this provision will be rejected.

4.3. An Applicant and any of its affiliates (that directly or indirectly control, are controlled by or are under common control with that entity) may submit its Application for Prequalification either individually, as joint venture or as a sub-contractor among them for the same contract. However, if prequalified only one prequalified Applicant will be allowed to bid for the same contract. All Bids submitted in violation of this provision will be rejected.

4.4. Applicants shall be considered to have a conflict of interest, if they participated as a consultant in the preparation of the design or technical specifications or have been hired or proposed to be hired by the Procuring Agency for execution of subsequent Framework Agreement(s) or Call-off Contract(s). In addition, Applicants may be considered to have a conflict of interest if they have a close business or family relationship with such professional staff of the Procuring Agency (or a recipient of a part of the funds) who:

4.4.1. are directly or indirectly involved in the preparation of the Prequalification Documents or Bidding Documents or specifications of the Framework Agreement or Call-off Contract and/or the Prequalification or Bid evaluation process of such Contract; or

4.4.2. would be involved in the implementation or supervision of such Framework Agreement or Call-off Contract, unless the conflict stemming from such relationship has been resolved throughout the Procurement Process, Bidding process during the execution of the Framework Agreement and/or Call-off Contract.

4.5. An Applicant that has been declared debarred or blacklisted shall be ineligible to be prequalified to bid or enter into any Framework Agreement or Call-off Contract for such period of time and for such type of procurement for which he has been declared debarred or blacklisted. The list of debarred firms and individuals is available at PPRA’s website.

4.6. An Applicant shall provide such documentary evidence for determining the eligibility of the Applicant to the reasonable satisfaction of the Procuring Agency.

5. **Eligibility (in terms of Nationality)**

5.1. Applicants may be ineligible if they are nationals of ineligible countries as indicated in Section V.

B. Contents of the Prequalification Documents

6. **Sections of Prequalification Documents**

6.1. This set of Prequalification Documents consists of Parts 1 and 2 which comprise all the sections indicated below, and which should be read in conjunction with any Addendum issued in accordance with ITA 8.

PART 1 Prequalification Procedures

6.2. Section I - Instructions to Applicants (ITA)

6.3. Section II - Prequalification Data Sheet (PDS)

6.4. Section III - Qualification Criteria and Requirements

6.5. Section IV - Application Forms

6.6. Section V - Eligible Countries

6.7. Section VI - Fraud and Corruption

PART 2 Supply Requirements

6.8. Section VII – Schedule of Requirements

6.9. The Procuring Agency accepts no responsibility for the completeness of the Prequalification documents, responses to requests for clarification, the minutes of the pre-Application meeting (if any), or Addenda to the Prequalification documents in accordance with ITA 8. In case of any discrepancies, documents issued directly through ePADS shall prevail.

6.10. The Applicant is expected to examine all instructions, forms, and terms in the Prequalification Documents and to furnish with its Application all information or documentation as is required by the Prequalification Documents.

7. **Clarification of Prequalification Documents and Pre-Application Meeting**

7.1. An Applicant requiring any clarification of the Prequalification Documents shall contact the Procuring Agency in writing through ePADS. The Procuring Agency will respond in writing through ePADS to any request for clarification provided that such request is received no later than three (03) days prior to the deadline for submission of the Applications. The Procuring Agency shall forward a copy of its response to all prospective Applicants through ePADS who have obtained the Prequalification Documents from ePADS, including a description of the inquiry but without identifying its source. If so indicated in the PDS, the Procuring Agency shall also promptly publish its response through ePADS. Should the Procuring Agency deem it necessary to amend the Prequalification Documents as a result of a clarification, it shall do so in accordance with the provisions of ITA 16.2.

7.2. If indicated in the PDS, the Applicant's designated representative is invited at the Applicant's cost to attend a pre-Application meeting through online platform / ePADS as per date and time mentioned in the PDS. During this Pre-Application meeting, prospective Applicants may request clarification of the schedule of requirement, the qualification criteria or any other aspects of the Prequalification Documents.

7.3. Minutes of the Pre-Application meeting, if applicable, including the text of the questions asked by Applicants, including those during the meeting (without identifying the source) and the responses given, together with any responses prepared after the meeting will be transmitted promptly through ePADS to all prospective Applicants who have obtained the Prequalification Documents. Any modification to the Prequalification Documents that may become necessary as a result of the pre-Application meeting shall be made by the Procuring Agency exclusively through the use of an Addendum pursuant to ITA 8 and through ePADS. Non-attendance at the pre-Application meeting will not be a cause for disqualification of an Applicant.

8. **Amendment of Prequalification Documents**

8.1. At any time prior to the deadline for submission of Applications, the Procuring Agency may amend the Prequalification Documents by issuing an Addendum through ePADS.

8.2. Any Addendum issued shall be part of the Prequalification Document and shall be communicated in writing through ePADS to all Applicants who have obtained the Prequalification Documents from the Procuring Agency. The Procuring Agency shall promptly publish the Addendum at the Procuring Agency's web page and ePADS.
Provided that an Applicant who had already submitted their Applications prior to the issuance of any such addendum shall have the right to withdraw his already submitted Application and submit the revised Application prior to the original or extended Application submission deadline through ePADS.

8.3. To give Applicants reasonable time to take an Addendum into account in preparing their Applications, the Procuring Agency may at its discretion, extend the deadline for the submission of Applications in accordance with ITA 16.2:
Provided that the Procuring Agency shall extend the deadline for submission of Applications, if such an addendum is issued within last three (03) days of the Application submission deadline.

C. Preparation of Applications

9. **Cost of Applications**

9.1. The Applicant shall bear all costs associated with the preparation and submission of its Application. The Procuring Agency will in no case be responsible or liable for those costs, regardless of the conduct or outcome of the Prequalification process.

10. **Language of Application**

10.1. The Application as well as all correspondence and documents relating to the Prequalification exchanged by the Applicant and the Procuring Agency, shall be written in the language specified in the PDS. Supporting documents and printed literature that are part of the Application may be in

another language, provided they are accompanied by an accurate translation of the relevant passages in the language specified in the PDS, in which case, for purposes of interpretation of the Application, the translation shall govern.

11. **Documents Comprising the Application**

11.1. The Application shall comprise the following:

11.1.1. **Application Submission Letter**, in accordance with ITA 12.1;

11.1.2. **Eligibility**: documentary evidence establishing the Applicant's eligibility, in accordance with ITA 13.1;

11.1.3. **Qualifications**: documentary evidence establishing the Applicant's qualifications, in accordance with ITA 14; and

11.1.4. any other document required as specified in the PDS.

12. **Application Submission Letter**

12.1. The Applicant shall complete an Application Submission Letter as provided in Section IV (Application Forms). This Form must be completed without any alteration to its format.

13. **Documents Establishing the Eligibility of the Applicant**

13.1. To establish its eligibility in accordance with ITA 4, the Applicant shall complete the eligibility declarations in the Application Submission Letter and Form ELI-1.1 (eligibility), included in Section IV (Application Forms).

14. **Documents Establishing the Qualifications of the Applicant**

14.1. To establish its qualifications to perform the contract(s) in accordance with Section III (**Qualification Criteria and Requirements**), the Applicant shall provide the information requested in the corresponding Information Sheets included in **Section IV (Application Forms)**.

14.2. Wherever an Application Form requires an Applicant to state a monetary amount, Applicants should indicate the Pak Rupee equivalent using the rate of exchange determined as follows:

14.2.1. for turnover or financial data required for each year - Exchange rate prevailing on the last day of the respective calendar year (in which the amounts for that year is to be converted).

14.2.2. value of single contract - Exchange rate prevailing on the date of the contract.

14.3. Exchange rates shall be taken from the publicly available source identified in the PDS. Any error in determining the exchange rates in the Application may be corrected by the Procuring Agency.

14.4. The documentary evidence of the Applicant's qualifications to conclude a Framework Agreement, and/or to perform any Call-off Contract(s) if awarded, shall establish to the Procuring Agency's satisfaction:

14.4.1. that, if required in the BDS, an Applicant that does not manufacture or produce the Goods it offers to supply shall submit the Manufacturer's Authorization using the form included in Section IV A (Bidding Forms) to demonstrate that it has been duly authorized by the manufacturer or producer of the Goods to supply these Goods in the Procuring Agency's Country;

14.4.2. that, if required in the BDS, in case of an Applicant not doing business within Islamic Republic of Pakistan (or the country where the procurement is being made), the Applicant is, or will be, (if awarded the call off contract) represented by an Agent in the country, equipped and able to carry out the Supplier's maintenance, repair, and spare parts stocking obligations in respect of the Goods.

D. Submission of Applications

15. **Submission of the Applications through ePADS**

15.1. The Bidder shall prepare and submit Bid with due diligence after carefully reading all the terms and condition before submission through ePADS in accordance with the procedures specified in the PDS.

15.2. In case the Applicant is a JV, the Application shall submit an authorized representative of the JV on behalf of the JV and so as to be legally binding on all the members as evidenced by a power of attorney signed by their legally authorized signatories.

16. **Deadline for Submission of Applications**

16.1. Applicants shall be submitted through ePADS no later than the deadline indicated in the PDS.

16.2. If required in accordance with the provisions of ITA 8.3, the Procuring Agency will extend the deadline for the submission of Applications, in which case all rights and obligations of the Procuring Agency and the Applicants subject to the previous deadline shall thereafter be subject to the deadline as extended.

16.3. The deadline will be extended in the same manner as that of original Invitation for Prequalification (or the advertisement) through ePADS.

17. **Opening of Applications**

17.1. The Procuring Agency shall open all Applications on the date and time specified in the PDS through ePADS. Late Applications shall be treated in accordance with ITA 16.1.

E. Procedures for Evaluation of Applications

18. **Confidentiality**

18.1. Information relating to the Applications, their evaluation and results of the Prequalification shall not be disclosed to Applicants or any other persons not officially concerned with the Prequalification process until the notification of Prequalification results is made to all Applicants in accordance

with ITA 26 through ePADS.

18.2. From the deadline for submission of Applications to the time of notification of the results of the Prequalification in accordance with ITA 26, any Applicant that wishes to contact the Procuring Agency on any matter related to the Prequalification process may do so only in writing through ePADS.

19. **Clarification of Applications**

19.1. To assist in the evaluation of Applications, the Procuring Agency may, ask an Applicant for a clarification (including missing documents) of its Application, to be submitted within a stated reasonable period of time. Any request for clarification from the Procuring Agency and all clarifications from the Applicant shall be in writing through ePADS.

19.2. If an Applicant does not provide clarifications and/or documents requested by the date and time set in the Procuring Agency's request for clarification, its Application shall be evaluated based on the information and documents available at the time of evaluation of the Application.

20. **Responsiveness of Applications**

20.1. The Procuring Agency may reject any Application which is not responsive to the requirements of the Prequalification Documents. In case the information furnished by the Applicant is incomplete or otherwise requires clarification as per ITA 19.1, and the Applicant fails to provide satisfactory clarification and/or missing information within prescribed time, it may result in disqualification of the Applicant.

21. **Margin of Preference**

21.1. Unless otherwise specified in the PDS, a margin of preference shall not apply in the Bidding process resulting from this Prequalification.

22. **Sub-contractors**

22.1. Subcontractors' qualification and experience will not be considered for evaluation of the Applicant. The Applicant on its own (without taking into

account the qualification and experience of the Subcontractor) should meet the qualification criteria.

F. Evaluation of Applications and Prequalification of Applicants

23. **Evaluation of Applications**

23.1. The Procuring Agency shall use the factors, methods, criteria, and requirements defined in Section III, Qualification Criteria and Requirements, to evaluate the qualifications of the Applicants, and no other methods, criteria, or requirements shall be used. The Procuring Agency reserves the right to waive minor deviations from the qualification criteria if they do not materially affect the technical capability and financial resources of an Applicant to perform the contract, however subject to the provisions of ITA 25.

23.2. Subcontractors proposed by the Applicant shall be fully qualified for their parts of the Scope of Supply of the Goods and Allied Services.

23.3. In case of multiple contracts, Applicants should indicate in their Applications the individual contract or combination of contracts in which they are interested. The Procuring Agency shall prequalify each Applicant for the maximum combination of contracts for which the Applicant has thereby indicated its interest and for which the Applicant meets the appropriate aggregate requirements. The Qualification Criteria and Requirements are mentioned in Section III.

23.4. Only the qualifications of the Applicant shall be considered. The qualifications of other related entities such as the Applicant’s subsidiaries, parent entities, affiliates, subcontractors or any other firm(s) different from the Applicant shall not be taken into consideration in determining the qualifications of the Applicant.

24. **Procuring Agency’s Right to Accept or Reject Applications**

24.1. The Procuring Agency reserves the right to accept or reject all the Applications, and to annul the Prequalification process at any time, without

thereby incurring any liability to the Applicants. However, the procuring agency shall record its reasons and justifications on ePADS, duly approved by the Principal Accounting Officer or Head of Organization.

25. **Prequalification of Applicants**

25.1. All Applicants whose Applications substantially meet or exceed the specified qualification requirements will be prequalified by the Procuring Agency.

25.2. An Applicant may be “conditionally prequalified,” that is, qualified subject to the Applicant submitting or correcting certain specified nonmaterial documents or deficiencies to the satisfaction of the Procuring Agency.

25.3. Applicants that are conditionally prequalified will be so informed along with the statement of the condition(s) which must be met to the satisfaction of the Procuring Agency before or at the time of submitting their Bids.

26. **Notification of Prequalification**

26.1. The Procuring Agency shall notify all Applicants in writing through ePADS indicating the names of those Applicants who have been prequalified or conditionally prequalified. In addition, those Applicants who have been disqualified will be informed separately through ePADS.

26.2. The procuring agency shall communicate to those suppliers or contractors who have not been pre-qualified the reasons for not pre-qualifying them through ePADS.

27. **Request for Bids**

27.1. Promptly after the notification of the results of the Prequalification, the Procuring Agency will invite the Bids from all the Applicants that have been prequalified through ePADS.

28. **Changes in Qualifications of Applicants**

28.1. Any change in the structure or formation of an Applicant after being prequalified in accordance with ITA 25 and invited to bid (including, in the case of a JV, any change in the structure or formation of any member thereto) shall be subject to the written approval of the Procuring Agency prior to the deadline for submission of Bids. Such approval shall be denied if:

28.1.1. a prequalified Applicant proposes to associate with a disqualified Applicant or in case of a disqualified joint venture, any of its members;

28.1.2. as a consequence of the change, the Applicant no longer substantially meets the qualification criteria set forth in Section III, Qualification Criteria and Requirements; or

28.1.3. in the opinion of the Procuring Agency, the change may result in a substantial reduction in competition.

28.2. Any such change should be submitted to the Procuring Agency before the date of “Invitation to Bids”.

29. **Redressal of Grievances**

29.1. Procuring agency shall constitute a Grievance Redressal Committee (GRC) and proceed in accordance with the procedure and mechanism defined under Rule-65 of Public Procurement Rules, 2025.

29.2. The GRC shall not have any of the members of Procurement Evaluation Committee. The committee must have one subject specialist depending on the nature of the procurement.

30. **Mechanism of Blacklisting**

30.1. The procuring agency shall initiate blacklisting or debarment proceedings against any bidder, supplier or contractor in accordance with the mechanism prescribed under Rule-25 of Public Procurement Rules, 2025 read with “Mechanism for Blacklisting Regulations, 2024”.

Framework Data Sheet

Framework Data Sheet (FDS)

The following specific data for the Framework Agreement shall complement, supplement, or amend the provisions in the Instructions to Applicants/Bidders (ITB). Whenever there is a conflict, the provisions herein shall prevail over those in ITB.

FDS Clause Number
ITB Number

Amendments of, and Supplements to, Clauses in the Instructions to Applicants/Bidders

A. General

FDS Clause Number 1
ITB Number 1.1

Identification Number of the Framework Agreement: **FFW9466**
The Procuring Agency is: **Sui Northern Gas Pipelines Limited (SNGPL) (Sui Northern Gas Pipelines Limited (SNGPL))**
Framework Agreement Title: **Prequalification of Third-Party Material Inspection Firms for a Three-Year Open Framework Agreement (Tender Enquiry No. GM (QA)-PQTPIF-04)**

FDS Clause Number 2
ITB Number 2.1

The name of Procuring Agency is: **Sui Northern Gas Pipelines Limited (SNGPL) (Sui Northern Gas Pipelines Limited (SNGPL))**
The name of Framework Agreement is: **Prequalification of Third-Party Material Inspection Firms for a Three-Year Open Framework Agreement (Tender Enquiry No. GM (QA)-PQTPIF-04)**

FDS Clause Number 3
ITB Number 2.2

Participating / Authorized Procuring Agencies under this Framework Agreement:

FDS Clause Number 4
ITB Number 3.1

Framework Type: **Open Framework Agreement**

FDS Clause Number 5
ITB Number 4.1

Framework Duration: **36 Months**
Commencement Date: **Expired after the framework duration of 36 months from the award date.**
Expiry Date: **Positions Without Lots :**

Position	Delivery Schedule	Quantity
Pre-Qualification of 3rd party Inspection Firm	**Address:** SNGPL Head Office, Lahore **Schedule:** As and When Required **Quantity:** 1/job	1/job

FDS Clause Number 6
ITB Number 5.1

A list of debarred firms and individuals is available on PPRA website: **https://ppra.gov.pk**

B. Contents of the Framework Document

FDS Clause Number 7
ITB Number 7.1

For clarification, the Applicant shall seek clarifications through: **EPADS v2.0**

FDS Clause Number 8
ITB Number 7.1 & 8.2

Information related to the Framework Agreement shall be published on: **EPADS v2.0**

FDS Clause Number 9
ITB Number 7.2

Pre-Bid Meeting: **Clarification Date: Tuesday, September 29, 2026**

C. Preparation of Applications / Bids

FDS Clause Number 10
ITB Number 10.1

This Framework Agreement Document has been issued in the language: **English**

FDS Clause Number 11
ITB Number 11.1(d)

Additional documents to be submitted through **EPADS v2.0**:

1. Bank's Certificates showing annual turnover

2. Audited Annual Financial Statement (s) for the last two years for Company and Income tax returns for individual/AOP etc.

3. Tax clearance / Deposit Certificates

4. NTN Certificate

5. Professional Tax Certificate

6. Collaboration with other Companies & Regions

7. Collaboration with Local Firms

8. List of Organizations with whom you are already enlisted in Pakistan

9. Detail of inspection orders executed in last three years with volume and value of contract indicating nature of work with phone numbers and addresses of clients and contact persons (if available)

10. Supporting documents as required for enclosed forms 1 - 4 (Marking Criteria of bids) of pre-qualification

FDS Clause Number 12
ITB Number 14.2

Source for determining exchange rates: **Not Applicable**

E. Submission of Applications / Bids

FDS Clause Number 18
ITB Number 16.1

Deadline for Bid Submission:
Day: ***Monday***
Date: ***Monday, October 5, 2026***
Time: ***03:00 PM***

FDS Clause Number 19
ITB Number 17.1

Opening of Bids shall be conducted through: **EPADS v2.0**
Day: ***Monday***
Date: ***Monday, October 5, 2026***
Time: ***03:30 PM***
Virtual participation link: **https://vendors.epads.gov.pk/**

F. Evaluation and Award

FDS Clause Number 20
ITB Number 21.1

Margin of Domestic Preference: **Not Applicable**

FDS Clause Number 21
ITB Number 22.1

Framework Award Basis: **Quality Based Selection (QBS)**

FDS Clause Number 22
ITB Number 23.1

Suppliers admitted to the Framework Agreement shall not be guaranteed any minimum quantity, value, or volume of business unless otherwise stated in the Framework Agreement.

FDS Clause Number 23
ITB Number 29.1

Framework-related complaints / grievances shall be submitted in writing through: **EPADS v2.0**
A complaint may challenge:

- The terms of the Framework Agreement Documents
- The Procuring Agency’s evaluation decision
- The Procuring Agency’s Framework Award decision

Framework Items / Lots

Eligibility & Qualification Criteria

Bidder's Type	Required Registration
Individual / Individual Consultant	NADRA CITIZENSHIP (CNIC/NICOP)
Sole Proprietorship	FBR (NTN)
Partnership Firm	FBR (GSTN)
Company (Private Limited)	Punjab (PRA)
Company (Public Limited)	PEC
Company (Holding Company)	
Company (Limited by Guarantee)	
State Owned Enterprise (Private Limited)	
State Owned Enterprise (Public Limited)	

Eligibility Criteria	Document
ISO/IEC 17020 certificate or equivalent	Yes

ISO 9001:2015 certificate	Yes
PST Certificate	Yes
EOBI registration certificate	Yes
Social Security certificate	Yes
Undertaking of Non-blacklisting	Yes

Evaluation Criteria

Quality Based Selection (QBS)

Technical Marks	70
Passing Marks	**42**
Inspection tools for inspection of Service Line materials	
Master/calibrated thread gauges (Ring & Plug) to cross check the compatibility of NPT & BSPT threads, Torque Wrench, Go-No Go gauges. (0.5 mark for each, Minimum 02 Nos. required) (Quantitative)(Doc Required) 06 Nos. Gauges Provided **(3)** 04 Nos. Gauges Provided **(2)** 02 Nos. Gauges Provided **(1)**	3

Digital Vernier Calipers, Shore Hardness Tester, and Dielectric Current Tester for S/V with tail piece and Torque Wrench. (0.25 mark for each, Minimum 04 Nos. required) (Quantitative)(Doc Required) 08 Nos. Equipment / Gauges Provided **(2)** 04 Nos. Equipment / Gauges Provided **(1)**	2
Paint / Coating Thickness Gauges (01 mark for each) (Quantitative)(Doc Required)	1
Pi tapes. Go-No Go gauges. (0.5 mark for each, Minimum 02 Nos. required) (Quantitative)(Doc Required) 04 Nos. Gauges Provided **(2)** 02 Nos. Gauges Provided **(1)**	2
Own PE material testing facility “OR” Contracted Facility (PE) In case of contracted facilities give details of laboratories with documentary evidence. (02 marks for any) (Quantitative)(Doc Required)	2
Inspection of MS Line pipe	
Own MS material testing facility “OR” Contracted Facility (MS) In case of contracted facilities give details of laboratories with documentary evidence. (02 marks for any) (Quantitative)(Doc Required)	2
Dye Penetrant Set of the renowned companies. (0.5 mark for each set, Minimum 02 Nos. required) (Quantitative)(Doc Required) 04 Nos. Set Provided **(2)** 02 Nos. Set Provided **(1)**	2
Ultrasonic Thickness Gauge of the renowned companies. (1.5 mark for each) 02 required (Quantitative)(Doc Required)	3

Inspection mirrors. (0.1 mark for each) 10 required (Quantitative)(Doc Required)	1
Multipurpose gauges. (0.25 mark for each, Minimum 04 Nos. required) (Quantitative)(Doc Required) 12 Nos. Gauges Provided **(3)** 8 Nos. Gauges Provided **(2)** 4 Nos. Gauges Provided **(1)**	3
Depth gauges. (0.5 mark for each, Minimum 04 Nos. required) (Quantitative)(Doc Required) 6 Nos. Gauges Provided **(3)** 4 Nos. Gauges Provided **(2)**	3
Micrometer (0.5 mark for each, Minimum 02 Nos. required) (Quantitative)(Doc Required) 6 Nos. Gauges Provided **(3)** 4 Nos. Gauges Provided **(2)** 2 Nos. Gauges Provided **(1)**	3
Ruler and Measuring tape. (01 mark for each set, Minimum 02 Nos. required) (Quantitative)(Doc Required) 3 Nos. Set Provided **(3)** 2 Nos. Set Provided **(2)**	3
Manpower	

Quality Assurance Manager/Inspection Manager Basic Qualification BSc/BE (Chemical/Metallurgical/Mechanical/Electrical) Experience Minimum 15-20 years of experience in inspection of equipment i.e. Steel line pipe, gas valves, pipe fittings and other allied material related to Oil & Gas Industries will be mandatory (3 marks for each) (Qualitative)(Doc Required) 02 Nos. Quality Assurance Manager / Inspection Manager provided **(6)** 01 No. Quality Assurance Manager / Inspection Manager provided **(3)**	6
Certified Engineers Basic Qualification BSc/BE Engineering Experience Minimum 02-03 years of experience in inspection of equipment i.e. Steel line pipe, gas valves, pipe fittings and other allied material related to Oil & Gas Industries will be mandatory (02 Marks for each, Minimum 03 required) (Qualitative)(Doc Required) 04 Nos. Certified Engineers provided **(8)** 03 Nos. Certified Engineers provided **(6)**	8
Material Inspectors Basic Qualification Minimum DAE Experience Minimum 02-03 years' experience in inspection of equipment i.e. Steel line pipe, gas valves, pipe fittings, coating material and other gas pipeline related material will be mandatory. (01 Mark for each, Minimum 05 required) (Qualitative)(Doc Required) 08 Nos. Material Inspectors provided **(8)** 07 Nos. Material Inspectors provided **(7)** 06 Nos. Material Inspectors provided **(6)** 05 Nos. Material Inspectors provided **(5)**	8
Work Experience (Minimum 03 years of experience till closing of tender enquiry is mandatory for prequalification)	

Relevant Work Experience (Qualitative)(Doc Required) Greater than 15 years **(18)** Greater than 10 years and less than 15 years **(16)** Greater than 05 years and less than 10 years **(14)** Greater than 03 years and less than 05 years **(12)** 03 years **(10)**	18
Financial Marks	**30**
Financial Capability (Minimum annual turnover shall be 15 Million during one year of the last 03 years till closing of the Tender enquiry)	
Average Annual Turnover (Qualitative)(Doc Required) Up to Rs. 50 Million **(25)** Up to Rs. 30 Million **(20)** Up to Rs. 15 Million **(15)**	25
Group Insurance Certificate (Quantitative)(Doc Required)	5

Call-Off / Secondary Procurement Procedure

PUBLIC PROCUREMENT REGULATORY AUTHORITY
(PPRA)
EPADS

Annexure

PUBLIC PROCUREMENT REGULATORY AUTHORITY (PPRA) EPADS

Standard Bidding Document

Information (Read-Only)

See Form Under Additional Forms and Documents: **Standard Bidding Document** (page number: 39)

Annexure A - Contractor Supplier Vendor HSE Statement

Information (Read-Only)

See Form Under Additional Forms and Documents: **Annexure A - Contractor Supplier Vendor HSE Statement** (page number: 57)

Annexure B - Third Party Inspection Order TORs

Information (Read-Only)

See Form Under Additional Forms and Documents: **Annexure B - Third Party Inspection Order TORs** (page number: 62)

Annexure C - Technical Specification of Material

Information (Read-Only)

See Form Under Additional Forms and Documents: **Annexure C - Technical Specification of Material** (page number: 69)

Annexure D - Introduction of the Bidder

Information (Read-Only)

See Form Under Additional Forms and Documents: **Annexure D - Introduction of the Bidder** (page number: 105)

Annexure E - Undertaking for Blacklisting Cross Debarment

Information (Read-Only)

See Form Under Additional Forms and Documents: **Annexure E - Undertaking for Blacklisting Cross Debarment** (page number: 106)

Annexure F - Bid Securing Declaration

Information (Read-Only)

See Form Under Additional Forms and Documents: **Annexure F - Bid Securing Declaration** (page number: 107)

Annexure G - Certificate of full Disclosure And Non-collusion

Information (Read-Only)

See Form Under Additional Forms and Documents: **Annexure G - Certificate of full Disclosure And Non-collusion** (page number: 108)

Annexure H – Special Conditions of Open Framework Agreement

Mandatory Participation in Subsequent Call-Off Procurements

All firms empanelled under the Open Framework Agreement shall participate in subsequent Call-Off Procurements / RFQs issued by SNGPL within their approved scope/category during the currency of the Framework Agreement, or provide a valid written justification for non-participation.

1. In case a firm fails to participate in the first Call-Off Procurement without satisfactory justification, a written warning shall be issued.

2. In case the same firm fails to participate in the second consecutive Call-Off Procurement, without valid justification acceptable to SNGPL, a show-cause notice shall be issued. After consideration of the firm's response and approval of the Competent Authority, the firm may be removed/de-listed from the respective Framework Panel for the remaining period of the Framework Agreement.

A firm removed/de-listed under this provision shall also not be eligible to participate in any subsequent addition, re-opening, refresh, or induction process carried out in continuation of the same Open Framework Agreement/tender during its remaining validity period.

Please note such removal/de-listing shall be restricted to the subject Open Framework Agreement only and shall not constitute blacklisting or debarment of the firm from participation in other SNGPL procurements.

Information (Read-Only)

See Form Under Additional Forms and Documents: **Annexure H – Special Conditions of Open Framework Agreement** (page number: 109)

PUBLIC PROCUREMENT REGULATORY AUTHORITY (PPRA) EPADS

Procurement Forms

Contractor's Key Personnel Representative and Their Schedules

For this Prequalification, “Contractor” shall mean the Applicant/Third-Party Material Inspection Firm. The Applicant shall nominate an Authorized Representative to act as focal person for all correspondence with SNGPL during the prequalification process and subsequent assignments under the Open Framework Agreement.

The Applicant shall provide details of suitably qualified Key Personnel, including the Quality Assurance/Inspection Manager, Certified Engineers and Material Inspectors, in accordance with the qualifications and experience prescribed in the Prequalification Document.

A separate Form PER-2 shall be submitted for each proposed person, stating name, proposed position, qualification, professional registration, total and relevant experience, present employment status and contact details. Each form shall be supported by CV, academic certificates, PEC registration where applicable, experience certificates, CNIC/passport copy and proof of present employment or engagement with the Applicant.

Only personnel supported by complete and verifiable documentary evidence shall be considered. The same person shall not be counted against more than one position. SNGPL reserves the right to verify the submitted information. Any replacement shall possess qualifications and experience equal to or better than the originally proposed person.

See Form Under Additional Forms and Documents: **Contractor's Key Personnel Representative and Their Schedules** (page number: 110)

Past Experience and Completed Contracts

Past Experience and Completed Contracts

The Applicant shall submit a year-wise list of completed Third-Party Material Inspection assignments carried out for Oil & Gas Companies, Public Sector Organizations or Government Departments. The list shall include the client’s name, description and scope of work, material inspected, contract/inspection order number, contract value, date of award, completion date and contact details of the client’s representative.

Relevant experience shall relate to inspection of oil and gas pipelines, line pipe, valves, pipe fittings and allied materials. Documentary evidence shall be provided in the form of contracts/inspection orders, completion certificates, satisfactory performance certificates or final payment certificates. Experience without verifiable supporting evidence shall not be considered.

International applicants shall also provide evidence of at least two years of relevant inspection experience in Pakistan.

Technical evaluation shall be based on completed relevant experience as follows: minimum 3 years: 10 marks; more than 3 but less than 5 years: 12 marks; 5 to less than 10 years: 14 marks; 10 to less than 15 years: 16 marks; and 15 years or more: 18 marks. Minimum qualifying marks under this category shall be 10 out of 18.

See Form Under Additional Forms and Documents: **Past Experience and Completed Contracts** (page number: 114)

Historical Contract Non-Performance, and Pending Litigation and Litigation History

Historical Contract Non-Performance, Pending Litigation and Litigation History

The Applicant shall disclose any contract terminated for default, failure to perform contractual obligations, imposition of liquidated damages, forfeiture of security, blacklisting, debarment or cross-debarment by any public or private organization.

The Applicant shall also provide details of all pending or concluded disputes, arbitration proceedings and court cases relating to its contracts or services. For each case, the Applicant shall state the client/organization, contract title, nature of dispute or default, amount involved, date, present status and final decision, where applicable.

Supporting notices, decisions, court orders, arbitral awards or settlement documents shall be attached. The Applicant shall also submit the prescribed non-blacklisting undertaking.

If no such matter exists, the Applicant shall state “Nil” and submit a signed declaration. Any false, inaccurate or incomplete disclosure may result in rejection or disqualification.

See Form Under Additional Forms and Documents: **Historical Contract Non-Performance, and Pending Litigation and Litigation History** (page number: 115)

Current Contracts and Their Progress

Current Contracts and Their Progress

The Applicant shall provide details of all ongoing contracts and Third-Party Material Inspection assignments as of the closing date of this Prequalification. Details shall include the client’s name, contract/inspection order title and number, scope of services, contract value, date of award, commencement date, expected completion date, percentage of work completed, remaining contract value and current status.

The Applicant shall disclose any delay, extension, suspension, dispute, performance issue or other matter affecting the progress of an ongoing contract, together with reasons and the revised completion date, where applicable.

Copies of relevant contracts, inspection orders, latest progress certificates, client confirmations or other supporting documents shall be attached. If the Applicant has no current contract, it shall state “Nil” and submit a signed declaration.

The information shall be used to assess the Applicant’s current workload, availability of manpower and resources, and capacity to undertake inspection assignments for SNGPL. SNGPL reserves the right to verify the submitted information.

See Form Under Additional Forms and Documents: **Current Contracts and Their Progress** (page number: 117)

Financial Capacity and Net Worth Evaluation Form

Financial Capacity and Net Worth Evaluation

The Applicant shall demonstrate adequate financial capacity to undertake Third-Party Material Inspection assignments. The Applicant shall submit audited financial statements, income tax returns and bank certificate(s) showing annual turnover for the relevant period.

A minimum annual turnover of PKR 15 million during at least one of the last three years up to the closing date of the Prequalification shall be mandatory.

Subject to the approved evaluation criteria, marks shall be awarded as follows: annual turnover from PKR 15 million to less than PKR 30 million: 15 marks; PKR 30 million to less than PKR 50 million: 20 marks; and PKR 50 million or above: 25 marks. A valid Group Insurance Certificate shall carry 5 marks.

All financial information shall be supported by verifiable documentary evidence. No separate marks shall be awarded for net worth unless specifically prescribed in the approved Prequalification Document.

See Form Under Additional Forms and Documents: **Financial Capacity and Net Worth Evaluation Form** (page number: 118)

PUBLIC PROCUREMENT REGULATORY AUTHORITY (PPRA) EPADS

PUBLIC PROCUREMENT REGULATORY AUTHORITY
(PPRA)
EPADS

Additional Forms and Documents

PRE-QUALIFICATION OF THIRD-PARTY MATERIAL INSPECTION FIRMS

TENDER ENQUIRY No. GM(QA)-PQTPIF-04

SUI NORTHERN GAS PIPELINES LIMITED

TABLE OF CONTENTS

Contents

1.0 Invitation for Pre-qualification of Third-Party Inspection Firms 3

2.0 Eligibility Requirement: 3

3.0 General Scope of Work for Inspection: 4

4.0 Procedure / Terms for Pre-Qualification: 5

5.0 Other information: 8

6.0 Submission of Pre-qualification Proposal: 8

8.0 Clarification on Pre-qualification Documents: 9

9.0 Amendment in Pre-qualification Documents: 10

10.0 Clarification on Pre-qualification Proposals: 10

11.0 Evaluation of Pre-qualification Proposals 10

12.0 Documents to Be Provided 11

13.0 General 11

ELIGIBILITY CRITERIA ..... 14 -18

1.0 Invitation for Pre-qualification of Third-Party Inspection Firms

1.1 Application/ Proposal/ bid for prequalification of **3rd party inspection firms** to carry out 100% inspection of locally manufactured (**during manufacturing & pre-delivery**) materials at manufacturer premises and/ or at our site are invited from all interested reputable individual (sole proprietorship), partnership firm, AOP, Company or a Joint Venture (JV) under an existing Joint Venture (JV) agreement or with the intent to enter into such an agreement supported by a letter of intent.

1.2 The firms which were previously prequalified by SNGPL are also required to apply afresh.

1.3 SNGPL intends **to prequalify inspection firms** for period of **three years**, however, we have right to reduce the time period or cancel the prequalification status at any time, should the requirement of SNGPL changes at any time or SNGPL considers it appropriate.

List of material to be inspected as per applicable standards is as follow:

Sr.	Material to be inspected	Applicable standard
	Service line material	
1	Service valves for polyethylene and steel connections	ASME B16.33/SNGPL Specs
3	Domestic gas regulators	ANSI B 109.4/SNGPL Specs
4	Forged Steel material, Gas Service Tees, Socket Weld Elbow, MS Sockets	ASME B16.11/SNGPL Specs
5	Meter couplings of Malleable iron, Sockets, Hexa Nipple, Elbow, Equal Tee etc.	BS143 & 1256/SNGPL Specs
7	Rubber Gaskets	ASTM D 2000 /BS 2751-BA60/ SNGPL Specs
8	Meter couplings of aluminum, Meter couplings of Cast iron Meter couplings of Brass material	BS 1490/SNGPL Specs ASTM A 126/SNGPL Specs BS1400/SNGPL Specs
9	Polyethylene Fittings line Elbow, Self-Tapping Tees, Reducers, Equal Tee, Caps and External Couplings etc.	ASTM D 2513, ASTM D 2683, ASTM D 3261/SNGPL Specs
10	Transition Pieces	ASTM F 1973 CSA B 137.4/SNGPL Specs
	Line pipe	
1	MS Line pipe	API-5L/SNGPL Specs
2	PE Line pipe	ISO 4437/ASME D-2513

1.4 The firms who get prequalified through this process shall be invited during prequalification time period; as & when required basis, **to quote their competitive rates** for 100% inspection of materials as per our specifications & prescribed scope of work.

2.0 Eligibility Requirement:

Local and international companies meeting the following eligibility requirements shall be considered for pre-qualification:

2.1 The applicant should be a legally incorporated, corporate entity or representatives are eligible to apply for pre-qualification directly or on behalf of their principals.

2.2 Applicants should have sound financial record and are required to submit Income Statement/ Balance Sheet/Income Tax Returns of Audited Accounts of the Organization pertaining to **last two financial years**.

2.3 The applicant should have adequate setup, competent personnel, equipment & facilities and other resources as mentioned in procedures / terms of Pre-qualification against **Clause 4** of

this document for carrying out Inspection for SNGPL as third-party inspectors throughout Pakistan.

2.4 The applicant should have an International Accreditation in ISO/ IEC 17020 or equivalent for carrying out Inspection work along with proven experience of carrying out inspection as third party inspector, of similar items and materials being procured by SNGPL.

2.5 The applicant shall agree to abide by all National, Federal, Provincial or Local Bodies laws, rules and regulations of Pakistan **including Social Security, EOBI, Group Insurance, and Compensation on casualty (death or injury during duty)** as applicable to their working.

2.6 The applicant firm should have a valid registration with Pakistan Engineering Council.

2.7 Applicant should meet all Health, Safety and Environment (HSE) requirements and Compensation Policy of SNGPL, enclosed as **Annex-A**.

2.8 In case of successful prequalification, it shall be liable for prequalified 3rd party inspection firm(s) to execute all the provisions/ terms of the subsequent inspection order(s); if signed between SNGPL and the prequalified 3rd party inspection firm(s) after due process.

2.9 In the case of a Joint Venture (JV), all members shall be jointly and severally liable for the execution of all the provisions of the contract; if signed between SNGPL and the prequalified 3rd party joint venture.

2.10 The Joint Venture (JV) shall nominate a representative who shall have the authority to conduct all business for and on behalf of any and all the members of the Joint Venture (JV) during the Prequalification process, Bidding process (in the event the prequalified Joint Venture (JV) submits a Bid for 100 % inspection) and during the period of inspection contract execution (in the event the JV is awarded the Contract). The Joint Venture (JV) applicant/firm shall attach the existing joint venture agreement along with their request for Proposal to obtain prequalification documents and their bid as well.

2.11 An Applicant/firm that has been declared debarred or blacklisted shall be ineligible to be prequalified to bid or enter into any inspection order/ contract for such period of time and for such type of procurement for which he has been declared debarred or blacklisted. The list of debarred firms and individuals is available at PPRA's website.

2.12 An Applicant/firm shall provide such documentary evidence for determining the eligibility of the Applicants/firm to the reasonable satisfaction of SNGPL.

2.13 Applicants/firms may be ineligible if they are nationals of disallowed countries by the Government.

3.0 General Scope of Work for Inspection:

Material Inspection Contractor will be responsible for inspection of Company's material at manufacturer premises or at Company's premises. The scope of inspection inter-alia would include:

3.1 To ensure that only brand-new goods are being supplied. Raw materials being used for manufacturing of the ordered items are virgin and not recycled/reconditioned/scrapped until allowed by applicable standard.

3.2 To ensure that the material conforms to the specifications attached as **Annex-B** and will be part of Inspection/Purchase order. Material found defective or inferior in quality or different in specification, mentioned in the purchase order shall be rejected.

3.3 TORs for inspection of Service Line Material and Pipe are attached as **Annex-C** for guideline and will be updated as per requirement with inspection tenders/orders.

3.4 To ensure that packing where applicable, is sufficiently robust, enough to withstand rough handling during up country journey and protection against corrosion / deterioration is provided.

3.5 To ensure physical counting of items as per purchase order/suppliers' invoice.

3.6 To verify that all Quality Control steps are being taken by the manufacturer during the product manufacturing and any deviation from Quality Control Plan should be highlighted in the report.

3.7 All or random test and stage inspection during the process of manufacturing at the manufacturer's works will be done as per tendered specifications of Inspection Order.

3.8 To verify the calibration certificate of equipment and attach the same with inspection report to be submitted.

4.0 Procedure / Terms for Pre-Qualification:

4.1 Purchase of Tender Documents:

The interested applicant/ firm; who are on active tax payer list of FBR, shall apply for purchase of tender documents **through formal letter** along with copies of valid NTN, GST/ PST & Professional Tax Clearance Certificate to the following office one day before closing of tender enquiry, against tender cost of **Rs. 10,000**/- in shape of CDR/Pay order favoring **Sui Northern Gas Pipelines Ltd.**

GENERAL MANAGER (QUALITY ASSURANCE)
SUI NORTHERN GAS PIPELINES LTD,
GROUND FLOOR, LDA PLAZA, EGERTON ROAD,
LAHORE. 54000 PAKISTAN
PHONE # +92-42-99201316

4.2 Preparation of Proposal for Pre-qualification:

Applicant meeting the eligibility requirements and desiring to apply for pre-qualification shall prepare a comprehensive Pre-qualification Proposal containing the following information and documents required as per attached checklist **(Annex-D)**.

4.3 Formal Submission Letter:

A formal covering letter from the Chief Executive of the applicant company or his nominated senior company official confirming that the applicant has read the eligibility requirements and other conditions as specified in this invitation to pre-qualification and that they shall abide by all applicable conditions in respect of pre-qualification process.

4.4 Corporate and Financial Details:

a) Company profile giving details of corporate structure, its place of registration as a company and details description of areas of business.

b) Total number of Engineers/technical employees and their education on company's permanent payroll.

c) Detail of company owned transport and office equipment.

d) Copies of company's audited accounts for company(s), along with tax returns and income tax returns for sole proprietorship/firm/AOP and bank certificates of last **two years.**

e) Address of company's office from where this pre-qualification will be dealt with.

f) Name, designation, Official E-mail, Website and contact number of the company official who will be the focal person in connection with this pre-qualification.

g) Quality Management System (ISO 9001:2015) certification.

h) Records of litigation and / or arbitration indicating in how many cases the award of such litigation / arbitration was given against the applicant. Moreover, undertaking

must be provided that the firm is not blacklisted/cross debarred by any other organization. (**Annex-E**)-Undertaking

i) Indicate if there are any plans for mergers, sell out or buyout of the applicant company which may become effective in the next three years.

j) Social Security and EOBI Certificates

4.5 Administrative & Management Requirements

4.5.1 An organizational diagram illustrating the position of inspection firm in relation to a larger organization. Relationships between departments within the same organization are useful support for claims.

4.5.2 Procedures should be documented to assure inspection body's staff is free from commercial, financial or other pressures which might affect their judgment.

4.5.3 Inspection firm should be independent of the parties involved in design, manufacture, supply, installation, purchase, ownership, use or maintenance of the items inspected or similar competitive items by common ownership.

4.5.4 The size, structure and composition of an inspection body, taken together should be suitable for the competent performance of the tasks/ inspection with which the inspection body is concerned.

4.5.5 The inspection firm should have a policy, documented in its quality system, concerning the observance of the confidentiality requirements of the client (SNGPL) by the inspection body. For inspections the procedures should set out that, besides the client, no one is entitled to have access to the results.

4.5.6 The inspection firm should be able to demonstrate that it is organized in such a way that the work of the staff performing inspections is supervised by personnel who are familiar with the objectives of inspections, the inspection methods and procedures being used and the assessments of the inspection results. The extent, nature and level of supervision exercised should take in to account the qualifications, experience, training and technical knowledge of the inspection staff and the inspections being undertaken.

4.5.7 Supervision of inspection personnel must include, but not be limited to, the regular review of inspection reports to ensure that they are in accordance with relevant legislation, inspection body's procedures and as necessary, contractual obligations agreed with the client.

4.5.8 Monitoring of performance of inspections should include on-site witnessing of inspections. On-site witnessing of inspections should be carried out by technically competent personnel, who are sufficiently independent to carry out the witnessing of inspections objectively.

4.6 Quality System

4.6.1 Inspection body should have quality manual meeting the requirement of ISO/IEC 17020 or equivalent.

4.6.2 The position of the quality manager (however named) should be clearly shown in the organizational chart. The quality manager shall be free from any influences or conflicts of interest that may affect the quality of his/her work.

4.6.3 Inspection Body should conduct internal quality audits at least once per year to verify that the documented operational procedures of the inspection body are being implemented as required. The scopes, dates and the detailed scheduling of audits should be planned and conducted in accordance with a documented procedure. Competent outside bidders may carry out internal audits.

e-Pak Acquisition and Disposal System (EPADS) generated document | © 2026

4.6.4 Management reviews should be done periodically taking account of any relevant information, such as reports from supervisory and managerial staff, the outcome of internal quality audits and external assessments, complaints from clients, changes needed in the quality system, the adequacy if current human and equipment resources, future plans, estimates for new work, and additional human resources, as well as the need for training of both new and existing staff, The frequency of management reviews should be determined by the inspection firms.

4.7 Personnel

4.7.1 Inspection body should ensure that Permanent personnel are under long term contract are effectively supervised, competent and that they work in accordance with the inspection body's quality system.

4.7.2 The inspection firm shall have a sufficient number of permanent competent personnel (as defined in bid evaluation criteria) having the education, training, technical knowledge, skills and experience necessary for handling the category, range and volume of the work to be performed.

4.7.3 An accredited inspection firm should define and document the qualification, training, experience and the level of knowledge required for the inspections to be carried out. Accreditation bodies should assess the appropriateness of such qualifications, training, experience and the level of knowledge for the scope of inspection to accredit.

4.7.4 The Inspection Firm shall ensure that its deployed staff are trained in all relevant inspection activities, procedures, specifications and standards, either through in-house training or competent external organizations.

4.7.5 Identification of training needs for each person should normally take place at least once per year. The review should result in documented plans for further training or a statement that no further training is required for individual at present. The purpose of these records is to demonstrate the competency of each member of the staff to perform specific inspections tasks and where relevant to use specific equipment.

4.7.6 Inspection Body should form code of conduct including issues relating to work ethics, impartially, personal safety and relationship with customers, company rules and any other issues needed to assure the proper conduct of inspection firms.

4.8 Facilities & Equipment

4.8.1 The inspection firm should own the facilities or equipment that it uses to perform inspection work and equipment must meet the requirements of ISO/IEC 17020 or equivalent.

4.8.2 If controlled environmental conditions are needed and premises outside those of the inspection body are used, the inspection body should monitor the environmental conditions in these premises with calibrated equipment, record the results and note of conditions are outside the limits within which inspection can be performed.

4.8.3 Use of facilities and equipment by unauthorized persons should not be permitted. If any item is found to have left the inspection body's direct control measures must be taken to confirm its continuing suitability before its return to use. Typical measures would include visual inspection, functional checks and /or recalibration.

e-Pak Acquisition and Disposal System (EPADS) generated document | © 2026

4.8.4 Unique identification of items / equipment (to be used for inspection) is important even when the organization has only one example of a particular item. This enables tracking when items are replaced for whatever reason.

4.8.5 All equipment used for measurements and tests, where the results of such measurements and tests have a significant influence on the results of the inspection. i.e. the conclusion about conformance with requirements shall be traceably calibrated.

4.8.6 Equipment identified by the Inspection firms, should be traceably calibrated to national or international standards where possible.

4.9 Inspection Methods & Procedures

4.9.1 The requirements against which the inspection is performed are normally specified in regulations, standards or specifications. The inspection body shall document the methods and procedures for inspection according to TORs of inspection.

4.9.2 In certain circumstances the inspection body's customer i.e. SNGPL may supply information for the inspection body to take into consideration when performing its inspection.

4.9.3 Each procedure should be reviewed by the inspection firm to ensure that:

I. The client's requirements are adequately defined, documented and understood.

II. The inspection body has the capability to meet the SNGPL's requirements.

III. Contract conditions are agreed.

IV. All equipment & facilities needed are identified.

V. Personnel & training needs are identified.

VI. Statutory requirements are identified.

VII. Safety requirements are identified.

a) Worksheets, notebooks etc. used to record observations during inspections shall be retained for reference for a defined period.

b) Documented procedures should include procedures to ensure the safety of personnel and where appropriate protection of the surrounding environment.

5.0 Other information:

Any other information, which in applicant's opinion may be considered suitable for pre-qualification.

6.0 Submission of Pre-qualification Proposal:

6.1 While preparing Proposal/Bid, the Applicant/firm is expected to examine all instructions, forms, and terms in the Prequalification Documents and to furnish with its Proposal all information or documentation as is required by the Prequalification Documents.

6.2 Pre-qualification proposal shall be prepared in **indelible ink**. The bid/ proposal shall be signed by a person duly authorized to sign on behalf of the Applicant/firm. In case the Applicant/firm is a JV, the Proposal shall be signed by an authorized representative of the JV on behalf of the JV and so as to be legally binding on all the members as evidenced by a power of attorney signed by their legally authorized signatories. It shall not contain any overwriting, except as necessary to correct errors made by the applicant. Any such corrections must be signed by the persons or person

who sign(s) the proposals. All of the information / data / documents as specified shall be neatly typed or printed.

6.3 Two sets of Pre-qualification Proposal (**one set each of Original & Duplicate**) compiled in hard bound folders in **sealed envelope / boxes** shall be submitted or mailed through courier at the following address.

GENERAL MANAGER (QUALITY ASSURANCE)
SUI NORTHERN GAS PIPELINES LTD,
GROUND FLOOR, LDA PLAZA
LAHORE. 54000 PAKISTAN
PHONE # +92-42-99201316

6.4 The sealed envelope shall clearly be marked the following:

a- **"Confidential"**

b- **"Proposal/Bid for Prequalification of 3rd Party Inspection Firms against Tender Enquiry # GM (QA)- PQTPIF-04**

c- **Address to "GM (Quality Assurance)- SNGPL, Ground Floor LDA Plaza Egerton Road Lahore**

d- **"Name of Applicant/firm"**

6.5 Only those parties are eligible to submit the Pre-qualification Proposal who have obtained the invitation to pre-qualification documents directly from SNGPL. All proposals received by the closing date shall be acknowledged by SNGPL in writing. Pre-qualification Proposals received after the specified date for submission shall not be considered and shall be returned unopened.

6.6 In the event of any discrepancy between the original and the copy of the proposal/ bid, the original shall prevail.

7.0 Last Date for Submission of Pre-qualification Proposal:

The Pre-qualification Proposal shall be submitted / uploaded through **EPADS 2.0** within the prescribed date and time. The submission and opening schedule shall be governed and monitored as per **PPRA guidelines** and the timeline reflected on EPADS 2.0. SNGPL may, at its discretion, extend the submission date through the prescribed procedure. Proposals received after the closing date and time shall not be accepted.

7.1 Your offer/ proposal for prequalification must remain valid for a period of **90 days** from closing date of the tender enquiry. Bids received with shorter validity may be considered non-responsive.

SNGPL may, however, request for extension of validity of bid beyond the original bid validity of 90 days without any change of substance of bid and other terms and conditions. The bidder(s) may refuse to extend validity of their bid.

8.0 Clarification on Pre-qualification Documents:

An Applicant, who has purchased pre-qualification document, may seek any clarification to the terms of prequalification/documents through fax or letter from the office of "**General Manager**

(Quality Assurance)" at the address given in **Para 4.1**, above. All queries received from the applicants prior to **three** working days of the last date for submission of proposals shall be responded by SNGPL in writing. Queries received after this deadline shall not be responded.

9.0 Amendment in Pre-qualification Documents:

At any time prior to the deadline for submission of Proposals, SNGPL reserve the right to amend the Prequalification Documents by issuing an addendum/amendment. Similarly, SNGPL reserve the right to extend the closing date/ time & place for submission of the bid/ proposal, if SNGPL deem it appropriate/necessary.

The Applicant/firm shall bear all costs associated with the preparation and submission of its Proposal. SNGPL will in no case be responsible or liable for those costs, regardless of the conduct or outcome of the Prequalification process.

The Proposal as well as all correspondence and documents relating to the Prequalification exchanged by the Applicant/firm and SNGPL shall be in written form.

10.0 Clarification on Pre-qualification Proposals:

After receiving Pre-qualification Proposals, SNGPL may identify additional information / data or it may ask for clarification on the contents or missing information in the Pre-qualification Proposals but clarifications not altering the substance of the proposal/ bid may be solicited and/or accepted by SNGPL. Applicants shall be required to respond immediately to the clarification or provide additional information as may be required.

11.0 Evaluation of Pre-qualification Proposals

Proposals received by the end of prescribed deadline for submission shall be first reviewed for complete information and compliance with eligibility requirement.

Proposals not containing substantial information as asked for in the Pre-qualification documents or not meeting the eligibility requirement shall not be considered for evaluation. **Proposals containing substantial information and complying with eligibility requirements shall be evaluated adopting a point-based evaluation criterion considering the following:**

Sr. No.	Description	Maximum Marks	Minimum Marks
1	Testing Facilities & Logistics	30	18
2	Manpower	22	14
3	Work Experience	18	10
4	Financial Capability	30	18
	Total Marks	100	60

All eligible applicants shall be evaluated on the above areas and marking criteria. Information / data provided by each applicant shall be reviewed and points shall be awarded against each attribute. A ranking of all applicants shall be done in order of the total points obtained by the applicant. The applicants capable of executing the inspection jobs as judged on the basis of the evaluation criteria shall be pre-qualified for participating in the bids for inspection jobs. Minimum number as elaborated above in each section is necessarily required for prequalification. All applicants shall be informed of their pre-qualification for participating in the bids. All applicants shall be informed of their pre-qualification or otherwise.

12.0 Documents to Be Provided

Copies of following documents and other relevant documents that could support for pre-qualification must be submitted.

- Bank's Certificates showing annual turnover
- Audited Annual Financial Statement (s) for the last two years for Company and Income tax returns for individual/AOP etc.
- Tax clearance / Deposit Certificates
- NTN Certificate
- Professional Tax Certificate
- Collaboration with other Companies & Regions
- Collaboration with Local Firms
- List of Organizations with whom you are already enlisted in Pakistan
- Detail of inspection orders executed in last three years with volume and value of contract indicating nature of work with phone numbers and addresses of clients and contact persons (if available)
- Supporting documents as required for enclosed forms 1 – 4 of pre-qualification.

13.0 General

13.1 SNGPL shall have the right to take appropriate actions either independently or through applicant for verification of any of the information included in the proposal for pre-qualification proposal.

13.2 SNGPL shall not be liable for any cost or expenses which may be incurred by the applicant or it's associated in connection with this pre-qualification.

13.3 SNGPL at its discretion may cancel the pre-qualification process without giving any reason. All applicants shall be informed if the pre-qualification is cancelled /postponed.

13.4 The pre-qualification process does not in any way be obligation for SNGPL to proceed with the work.

13.5 SNGPL shall not be responsible / liable to any applicant or its associate for any damages or consequences if the pre-qualification process is cancelled.

13.6 The intended applicants are advised that the pre-qualification process shall be carried out strictly following the procedure specified in this document. Applicants should therefore not try to influence the pre-qualification process or use any intermediate party on the understanding that the party can in any way facilitate the applicant's pre-qualification process. Such attempt shall lead to disqualification of the applicant.

13.7 All deviations from or exceptions to the terms & conditions shall be clearly stated separately in the proposals.

13.8 SNGPL reserves the right to reject any or all bids which do not meet the intent of the terms & specifications or where there is evidence of lack of competition.

13.9 Canvassing by any bidder at any stage of the tender evaluation is strictly prohibited. Any infringement will lead to disqualification.

13.10 Undertaking for Backlisting:
The bidder/ supplier / contractor is required to furnish undertaking on non-judicial stamp paper of Rs 100 along with its bid duly signed stamp as per **Annex E**

13.11 Bid Securing Declaration:
The applicant / firm shall submit Bid Securing Declaration along with their proposal/ bid as per format attached as **Annex F**, failing to which their application shall not be considered for evaluation.

13.12 Disqualification of suppliers and contractors:

SNGPL shall disqualify a firm or contractor if it finds, at any time, that the information submitted by him concerning his qualification as 3rd party inspection firm or contractor was false and materially inaccurate or incomplete.

13.13 Certificate of Full Disclosure and Non-Collusion:

The applicant/ firm will provide the certificate of full disclosure and non-collusion duly signed and stamped as per **Annex-G** along with the proposals for prequalification against this tender enquiry.

SNGPL also reserves the right to reject/cancel all bids or proposals at any time prior to the acceptance of a bid or proposal as per PPRA Rule # 33.

13.14 Redressal of Grievance:

SNGPL has constituted a grievance redressal committee (GRC) comprising of odd number of persons with necessary powers and authorization; as per PPRA Rule # 48, to address the complaints and grievance of bidders that may occur prior to the entry into force of the procurement contract. The bidder feeling aggrieved by act of SNGPL may lodge its written complaint as per procedure and timelines given in PPRA Rule # 48, which shall be investigate by the Grievance Redressal Committee (GRC) and decide upon the complaint.

13.15 Blacklisting:

The bidder/ supplier / contractor who, in the sole opinion of the Company (SNGPL) is found involved in any corrupt & fraudulent practice or practices, or is found/ established incapable to perform the contractual obligation under the contract awarded to it by the Company, or if deviates from its prior commitments or declaration made regarding its submitted bid/ proposal shall be blacklisted/ debarred/ cross debarred as per PPRA Rule # 19 & Regulations issued by PPRA from time to time in this regard, in addition to other penalties likely to be imposed against it as per other terms & conditions of the tender enquiry.

MANNER AND MECHANISM TO BLACKLISTING/ CROSS DEBARRING OF SUPPLIER OR CONTRACTOR

Proceedings for blacklisting: -

General Manager (QA) on his own accord or on receipt of information that the bidder or contractor who is either involved in corrupt and fraudulent practices as defined in PPRA Rules, or fails to perform his contractual obligations or fails to abide by bid securing declaration, shall determine whether it is necessary and appropriate to initiate formal black listing proceedings.

a) In case General Manager (QA) decides to initiate blacklisting proceedings, the case shall be forwarded to the committee duly approved by management from time to time for initiating blacklisting proceedings.

b) The bidder/ contractor shall be formally intimated in writing by the committee about the nature of complaint/ matter/ default/ fraudulent & corrupt practices as defined in PPRA's rules and initiate the blacklisting/ cross debar proceedings.

c) The bidder/ contractor shall be intimated by giving a fifteen (15) days' notice through courier services, registered post or fax or email and, shall be provided an opportunity of furnishing detailed response either through written representation or personal hearing or both.

Blacklisting on non-execution of the contract: - If blacklisting proceedings are to be initiated due to contractor/ supplier's failure to meet the contractual obligations, then the

bidder/ supplier shall be given a chance to invoke Arbitration before start of formal blacklisting proceedings.
In case, the contractor/ bidder does not opt for Arbitration within time given, then, notice for blacklisting shall be served accordingly to initiate the proceedings.

d) In case the bidder/contractor fails to furnish his defense / representation within 15 days of 1st notice of blacklisting, a reminder shall be sent giving another opportunity to furnish the reply within 7 days.

e) If the bidder/ contractor fails to submit his reply even after 2nd notice or fails to furnish the tenable justification of charges framed against him, the committee may proceed further in this regard on the basis of information, record and material available before him.

The committee shall complete its proceedings within 30 days from the date of first notice given pursuant to paragraph (c) above.

Findings & Decisions:

a) The Committee after finalizing his proceedings shall record his findings in writing and decide one of the following measures and GM (QA) shall obtain approval of the management for implementation:

i. Blacklisting and henceforth cross debarred for participation in any public procurement for the period up to **10 years** if corrupt and fraudulent practices as defined in PPRA's rules has been established;

ii. Blacklisting and henceforth cross debarred for participation in respective category of public procurement if the bidder/ contractor fails to perform his contractual obligations as per terms of the tender enquiry/ contract and within the specified time. Such blacklisting period shall not be more than **3 years** or,

iii. Blacklisting and henceforth cross debarred for participation in respective category of public procurement for a period up to **6 months** if bidder/ contractor alters his bid/ withdraws his bid/ does not accept the contract or does not abide with bid security declaration.

General Manager (QA) shall communicate in writing to the PPRA and respective bidder/supplier his decision containing grounds for such action of blacklisting.

Appeal: -

The bidder/ supplier may file appeal against the decision of the committee before PPRA as per conditions/ mechanism defined in PPRA's rules.

e-Pak Acquisition and Disposal System (EPADS) generated document | © 2026

ELIGIBILITY CRITERIA

Eligibility	Mandatory	If Necessary	Eligible Yes/No
General Information	Registered Name of AOP / Firm/Company (in Pakistan) i) Sub Offices (if any) ii) Telephone Number iii) Email iv) Corporate Structure v) Date and place of establishment of Firm/Company vi) Name, designation, CNIC numbers of person(s) authorized to represent firm /company in contractual matters.	-	
Legal	• NTN number • GST certificate • Professional Tax certificate	**PST certificate**	
Business & Trade	• PEC certificate • ISO/IEC 17020 certificate or equivalent • ISO 9001:2015 certificate	**National/International registration**	
Procuring agency	• Undertaking of Non-blacklisting • Social Security certificate • EOBI registration certificate	-	

Sr.#	Description	
1	**Organization** (*Please tick in relevant box* and provide documents as certificate of incorporation of business, declaration of sole proprietor ship, Articles & Memorandum of Association / partnership deed)	
1.1	Limited Company _____	Please attach Articles of Association and Memorandum of association along with NTN, GST/PST certificates.
1.2	Partnership / AOP _____	Please attach Partnership Deed registered along with NTN, GST/PST certificates..
1.3	Sole Proprietorship _____	Please attach NTN, GST/PST certificates
1.4	JV	Please attach JV Agreement along with (NTN & GST/PST)

e-Pak Acquisition and Disposal System (EPADS) generated document | © 2026

Marking criteria of Bids

1- Testing facilities and logistics (Documentary evidence shall be provided that the items are presently held by the Firm)				
		Total Marks	**Minimum Marks**	**Obtained Marks** *(to be filled by SNGPL)*
Inspection tools for inspection of Service line materials as mentioned at Sr. No. 1.0 of Pre-qualification document				
1.1	Provide documentary evidences of present holding of master/calibrated thread gauges (Ring & Plug) to cross check the compatibility of NPT & BSPT threads, Torque Wrench, Go-No Go gauges. (0.5 mark for each, Minimum 02 Nos. required)	03	02	
1.2	Provide documentary evidence of present holding of Digital Vernier Calipers, Shore Hardness Tester, and Dielectric Current Tester for S/V with tail piece and Torque Wrench. (0.25 mark for each, Minimum 04 Nos. required)	02	01	
1.3	Provide documentary evidence of present holding of Paint/Coating thickness gauges. (01 mark for each)	01	01	
Inspection of PE Line pipe				
1.4	Own PE material testing facility **"OR"** Contracted Facility (PE). In case of contracted facilities give details of laboratories with documentary evidence. (02 marks for any)	02	02	
1.5	Provide documentary evidence of present holding of Pi tapes, Go-No Go gauges. (0.5 mark for each, Minimum 02 Nos. required)	02	01	
Inspection of MS Line pipe				
1.6	Own MS material testing facility **"OR"** Contracted Facility (MS) In case of contracted facilities give details of laboratories with documentary evidence. (02 marks for any)	02	02	
1.7	Provide documentary evidence of present holding of Dye Penetrant Set of the renowned companies. (0.5 mark for each set, Minimum 02 Nos. required)	02	01	
1.8	Provide documentary evidence of present holding of Ultrasonic Thickness Gauge of the renowned companies. (1.5 mark for each, Minimum 01 No. required)	03	1.5	
1.9	Provide documentary evidence of present holding of Inspection mirrors. (0.1 mark for each, Minimum 05 Nos. required)	01	0.5	
1.10	Provide documentary evidence of present holding of Multipurpose gauges. (0.25 mark for each, Minimum 04 Nos. required)	03	01	
1.11	Provide documentary evidence of present holding of Depth gauges. (0.5 mark for each, Minimum 04 Nos. required)	03	02	
1.12	Provide documentary evidence of present holding of Micrometer (0.5 mark for each, Minimum 02 Nos. required)	03	01	
1.13	Provide documentary evidence of present holding of ruler and measuring tape. (01 mark for each set, Minimum 02 Nos. required)	03	02	
	Sub Total	**30**	**18**	

e-Pak Acquisition and Disposal System (EPADS) generated document | © 2026

2-Manpower (Documentary evidence shall be provided that the Man Power is engaged by the Firm)				
Sr.	**Description**	**Total Marks**	**Minimum Marks**	**Obtained Marks** *(to be filled by SNGPL)*
2.1	**Quality Assurance Manager/Inspection Manager** **Basic Qualification** BSc/BE (Chemical/Metallurgical/Mechanical/Electrical) **Experience** Minimum 15-20 years of experience in inspection of equipment i.e. Steel line pipe, gas valves, pipe fittings and other allied material related to Oil & Gas Industries will be mandatory (3 marks for each)	06	03	
2.2	**Certified Engineers** **Basic Qualification** BSc/BE Engineering **Experience** Minimum 02-03 years of experience in inspection of equipment i.e. Steel line pipe, gas valves, pipe fittings and other allied material related to Oil & Gas Industries will be mandatory (02 Marks for each, Minimum 03 required)	08	06	
2.3	**Material Inspectors** **Basic Qualification** Minimum DAE **Experience** Minimum 02-03 years' experience in inspection of equipment i.e. Steel line pipe, gas valves, pipe fittings, coating material and other gas pipeline related material will be mandatory. (01 Mark for each, Minimum 05 required)	08	05	
	Sub Total	**22**	**14**	

e-Pak Acquisition and Disposal System (EPADS) generated document | © 2026

3- Work Experience (Documentary Proof must be attached against each item) (Minimum 03 years of experience till closing of tender enquiry is mandatory for prequalification)				
Please attach **Year-wise list of Completed Jobs** awarded by **Oil & Gas Companies (Public Sector/Government Departments) for performing Material Inspection jobs** of oil and gas pipelines and related facilities. **Documentary evidences in the form of job completion certificates/Final Payment Certificates. In case, the applicant firm is operating internationally, evidence will be provided for at least 2 years of relevant experience in Pakistan as well.**				
Sr.	**Description**	**Total Marks**	**Minimum Marks**	**Obtained Marks** *(to be filled by SNGPL)*
3.1	Minimum relevant work experience 03 years	10	10	
3.2	Greater than 03 years and less than 05 years	12		
3.3	Greater than 05 years and less than 10 years	14		
3.4	Greater than 10 years and less than 15 years	16		
3.5	Greater than 15 years	18		
	Sub Total	**18**	**10**	

4-Financial Capability (Minimum annual turnover shall be 15 Million during one year of the last 03 years till closing of the Tender enquiry)*				
Sr. No.	**Description**	**Max. Marks**	**Minimum Marks**	**Obtained Marks** *(to be filled by SNGPL)*
4.1	**Average annual turnover**			
	Up to Rs. 50 Million	25	15	
	Up to Rs. 30 Million	20		
	Up to Rs. 15 Million	15		
	Group Insurance Certificate	05	05	
	Sub Total	**30**	**20**	

***Please check Bank Certificates along with Tax return for confirming the turnover/revenue generated**

Important Notes:

1- Confirmation to Standard and Specifications of Tender is mandatory for further evaluation of the bid submitted by the Contractor.
2- Any amendment in the Pre-qualification document or Bid evaluation criteria shall lead to rejection of the bid/de-listing of firm even during or after the finalization of pre-qualification process.
3- If any bidder/ contractor provides false / wrong information, their bid shall be rejected.
4- If it is established, at any stage, even after signing of contract or subsequently after award of work order(s), that the information submitted by the bidder/ contractor pertaining/ concerning their bid, was false and materially inaccurate or incomplete, the contract shall be terminated and work orders, if any awarded, shall be cancelled.
5- Certificates/degrees of Manpower must be attached.
6- Marks will be given on the basis of confirmation of documentary evidences.
7- Minimum passing marks for qualification/acceptance of the bid against each category are mentioned as under;

Sr. No.	Description	Maximum Marks	Minimum Marks
1	Testing Facilities & Logistics	30	18
2	Manpower	22	14
3	Work Experience	18	10
4	Financial Capability	30	18
	Total	100	60

Total Marks: **100**
Minimum Score: **18+14+10+16 = 60**
Obtained Marks: _____

The Contractor/Supplier/Vendor shall prepare and maintain information including a clear method statement, regarding Contractor/sub-contractor activities, which outline the work to be undertaken and the method(s) for minimizing and maintaining environmental impacts, OH&S Hazards and maintaining compliance with HSE regulations.

To assist in organizing and maintaining information, background information sections have been included (section I, II, III). Sections can be modified or deleted as required when requesting a method statement from Contractors / subcontractors.

SNGPL's Personnel to Complete Sections I, II, and III
Suppliers to Complete Sections IV, V, and VI

Section I Your Information: **[type or print]**

Name:	
Phone Number:	
Fax Number:	
Dept Name:	

Section II. Requisition Information: **[type or print]**

Requisition Number:	
Project Number: (if applicable)	

Section III. Service or Activity to be Performed: **[Check all that apply]**

Material/Chemical: (Production/Non-production)	Paint Solvent Sealer	Treatment Chemicals Lubricants, Oils, Greases Gasoline	Janitorial Material Other (specify) _____ Other (specify) _____
Facilities/Construction:	Ditching Electrical Paint Structural	Roofing Mechanical HVAC	General Contractor Arch/Engin/Consulting Other (specify) _____
Services: (Includes Environmental Services)	Janitorial Security Maintenance	Emergency Response Env. Consulting Paint Booth Cleaning	Waste Management Other (specify) _____
Containerization:	5 gal. Or less Drums Bulk Tanks	**Type of Contract:**	Commodity Management On-site Manager Provided Total Cost Contract

Section IV. Supplier/Contractor/Vendor Information: **[Circle / Check all that apply]**

Current Supplier/Contractor/Vendor to this Facility

New Supplier/Contractor/Vendor to this Facility

Currently involved in other Facility project(s)

List Project(s): _____

(Complete Information in table below) **[Type or print]**

Name:	
Address:	
City & Province:	
Phone Number:	
Fax Number:	
President/General Manager/ CEO etc:	
Facility Site Coordinator:	
Email Address:	
Phone Number:	
Mobile Number:	
Fax Number:	
Pager:	
24 Hour Emergency Number:	

Subcontractor Information: **(List suppliers/contractors/vendors not identified) [type or print]**

Type	Firm Name
Architectural	
Mechanical	
Electrical	
Heavy Vehicles	
Industrial Services	
Painting	
Roofing	
Architectural/Engineering / Consulting Firm	
Sampling/Testing	
Chemical Supplier	
Other (specify)	
Scrap/Salvage Dealer	
Waste Disposal	
Demolition Disposal	

Note: It is strongly recommended that you have your subcontractors and suppliers involved at this facility should complete a separate HSE briefing package for the facility's review.

Section V. Contractor / Supplier / Vendor Method Statement:

Supplier / Contractor / Vendor is financially responsible for on-site HSE remediation actions resulting from incidents involving their employees and subcontractors. To minimize the risk of environmental accidents, please review and initial the items contained in the HSE Management Basics Table below:

Health, Safety and Environment Management Basics	Tick (√)
1. Contractor will ensure that the • Health of its employees is protected. • All activities carried out for the execution of the job are safe. • Compliance is met with all relevant laws and regulations. • All HSE (Health, Safety and Environment) procedures of the Company are implemented. • Safe working environment is provided to its employees.	
2. Contractor will take all necessary steps to minimize the hazards associated with the job. Appropriate personal protective equipment should be provided to the employees where hazards exist.	
3. All incidents resulting in Dangerous Occurrence, minor or major injury, fire, vehicle accident and environmental incident are to be reported to Company within 24 hours.	
4. The contractor is to make his own arrangements for treating injuries to his employees. In the event a contractor employee is injured while working for the Company, it is the contractor's responsibility to notify the Company representative immediately and to report the circumstances of injury.	
5. Contractor's mobile equipment such as trucks, crane, welding machines etc must be maintained in good working condition. Contractor's trucks and other mobile equipment should be operated in such a way that material they are carrying does not fall off the equipment on to the roads. If repairs are required or vehicles become immobilized, arrangements must be made to correct the situation with additional outside help. 6. Prior to the start of work a certificates from a competent authority is to be given to the site in charge by the contractor stating that all mobile heavy equipment are in good working condition. Only licensed and designated qualified people shall operate contractor's equipment.	
7. Company equipment must not be handled or tampered with by contractor. The Company representative may grant permission to the contractor on specific conditions to operate Company equipment if emergency conditions so require.	
8. When doing work involving excavation, contractors must not damage or break into or otherwise open any underground piping. Extreme care must be exercised in this respect while excavating with power driven equipment. If lines are accidentally damaged, notify the Company representative immediately.	
9. All excavation made by contractors must be fenced, barricaded or otherwise protected so as to prevent personnel from slipping or falling into them.	
10. Drawing / Excavation Include safety talk notified for facilitating contract employees ever during transportation by Cos TPT.	
11. The authorized Company executive will issue a permit appropriate for any work to be done by the contractor at Company's designated sites where work permit procedure is applicable. After receiving permit for work the contractor shall be guided by Company rules and applicable laws in performing his work.	
12. Contractors shall provide to all their staff the relevant PPE's as specified by the Company against each job. Contractors staff will do compliance.	
13. Contractor's job sites must be kept reasonably clean and free of rubbish and debris which may create tripping or fire hazard. Upon completion, the contractor shall leave the area in a clean and orderly manner, removing all contractor's debris, equipment, and excess material.	
14. Contractor shall dispose off all the waste generated from its activity in environment friendly manner as described in Pakistan Environmental Protection Act, 1997.	
15. The Contractor / Vendor / Supplier shall provide information regarding OH&S and environmental conditions pertaining to machinery / equipment / product / material / item being procured or services being hired.	

Section VI. Supplier/Contractor/Vendor Certification: [review and sign]

I have reviewed and understand the information contained in this document. I also understand that *SNGPL's HSE* Personnel have the right to inspect our activities and those of our Suppliers/Contractors/Vendors with regards to our on-site activities. I further understand that activities pertaining to service and/or maintenance contracts may only require submission of this form on an annual basis.

Name	
Title	
Signature	
Date	

PROCUREMENT REGULATORY AUTHORITY (PPRA) EPADS

Annex-B

THIRD PARTY INSPECTION ORDER TOR'S

¾" Ø ALUMINUM METER COUPLING WITH GASKET

Third party inspector will ensure that: -

1) Complete record of Raw Material purchased its conformance certificates/test reports both in-house and outsourced; Quantity received, issued, in stock is maintained and is in concurrence to quantity of finished Aluminum meter couplings and gaskets. (Results of chemical and metallographic tests must be enclosed third party inspection report)
2) Material purchased is virgin and not scrape etc.
3) Chemical composition of the Material of finished Aluminum Meter Couplings & Gaskets are as per tendered specifications.
4) Dimensions of both Aluminum Meter Couplings & Gaskets are as per tendered specification/drawings.
5) Both swivel & nut assembly must have trademarks of manufacturer.
6) Threads of swivel are as per British Standard Pipe Taper Threads (BSPT) BS-21 or ISO 7-1 or EN 10226-1-2004. Following characteristics of threads must be checked using profile projector etc
   - ✓ Truncation of roots and crests are rounded
   - ✓ Taper 1°47'
   - ✓ Pitch =1.814 mm
   - ✓ Thread Height =1.162 mm
   - ✓ Included thread angle = 55°
   - ✓ Thread faces are free from chattering marks, cutting tool lines, steps etc
7) Finished Coupling Nuts should pass the Flattening test as per SNGPL specification.
8) Fully Machined / Finished Coupling swivel should pass leakage and strength/rapture test as per SNGPL specifications.
9) Casting defects are not present. No sharp/knife edges are present.
10) Gaskets are free from burs/cuts/ wears etc. following characteristics of gaskets must be checked.

✓ Base Polymer	NBR with 31-40 % Acrylonitrile
✓ Indentation Hardness	Shore Hardness 60A,-5, +5
✓ Specific Gravity	0.35 ±0.02 g/cm^3 (0.55-0.95 g/cm^3)
✓ Tensile Strength Min.	1000 PSI
✓ Elongation @ Break Min.	300 %
✓ Compression Set @ 100 Degrees 22 Hrs	20% max.

11) Any other non-conformance/deviation from specifications which may or may not limit the function appearance or useful life of the fitting is not present.
12) To ensure that once rejected material (on the basis of poor threads, pinholes, casing defects etc means those defects which cannot be removed with rework) is not re-supplied and wasted where deemed necessary
13) Inspections should be carried out by third party inspector throughout the manufacturing process and not merely at completion of production.
14) A complete record of all materials rejected by the third party shall be maintained and provided to SNGPL upon request.

THIRD PARTY INSPECTION ORDER TOR'S

Domestic Gas Regulator

Third party inspector will ensure that:-

1) Complete record of Raw Material purchased its conformance certificates/test reports both in-house and outsourced; Quantity received, issued, in stock is maintained and is in concurrence to quantity of finished Domestic Gas Regulators.
2) Material purchased is virgin and not scrape etc.
3) Chemical composition of the Material of finished Domestic gas regulator is as per tendered specifications.(Result of Chemical test must be enclosed with Third Party Inspection report)
4) Dimensions of Domestic gas regulator are as per tendered specification/drawings.
5) Easily identifiable Trademarks of manufacturer and other markings are available on body shell.
6) ¾" Ø Threads of both inlet & Outlet are as per British Standard Pipe Taper Threads (BSPT) BS-21 or ISO 7-1 or EN 10226-1-2004. Following characteristics of threads must be checked using profile projector etc

   - ✓ Truncation of roots and crests are rounded
   - ✓ Taper 1°47'
   - ✓ Pitch =1.814 mm
   - ✓ Thread Height =1.162 mm
   - ✓ Included thread angle = 55°
   - ✓ Thread faces are free from chattering marks, cutting tool lines, steps etc

7) Finished Domestic gas regulator should pass strength, leakage and performance tests as per Tendered specifications.
8) Casting defects are not present. Internal parts not corroded. No sharp/knife edges are present.
9) Finished Domestic gas regulator should pass strength, leakage and performance tests as per Tendered specifications.
10) Any other non-conformance/deviation from specifications which may or may not limit the function, appearance or useful life of the fitting is not present.
11) To ensure that once rejected material (on the basis of poor threads, pinholes, casing defects etc means those defects which cannot be removed with rework) is not re-supplied and wasted where deemed necessary
12) Inspections should be carried out by third party inspector throughout the manufacturing process and not merely at completion of production.
13) A complete record of all materials rejected by the third party shall be maintained and provided to SNGPL upon request.

THIRD PARTY INSPECTION ORDER TOR'S

¾" , 1" & 2" GAS SERVICE TEES

Third party inspector will ensure that:-

1) Complete record of Raw Material purchased its conformance certificates/test reports both in-house and outsourced; Quantity received, issued, in stock is maintained and is in concurrence to quantity of finished service tees.
2) Material purchased is virgin and not scrape etc.
3) Chemical composition of the Material of finished service tees are as per tendered specifications.(Results of chemical and metallographic tests must be enclosed with Third Party Inspection report)
4) Dimensions of service tees are as per tendered specification/drawings.
5) Both main body & Cap must have trademarks of manufacturer.
6) Threads of main body both male/female, plug and cap are as per American National Standard Pipe Taper Threads (NPT) ANSI/ASME B1.20.1 (1983). Following characteristics of threads must be checked using profile projector etc

Name/ Nominal Size	Thread Size	Pitch	Height	Angle
Gas Service Tee/ ¾"	Cap /main body male	2.209 mm	1.767 mm	60 deg
	Plug side/main body female	1.814 mm	1.451 mm	60 deg
Gas Service Tee/ 1"	Cap /main body male	2.209 mm	1.767 mm	60 deg
	Plug side/main body female	1.814 mm	1.451 mm	60 deg
Gas Service Tee/ 2"	Cap /main body male	2.209 mm	1.767 mm	60 deg
	Plug side/main body female	2.209 mm	1.767 mm	60 deg

7) Fully Machined / Finished Service Tees should pass leakage and strength test as per SNGPL specifications.
8) Forging defects are not present. No sharp/knife edges are present.
9) Any other non-conformance/deviation from specifications which may or may not limit the function appearance or useful life of the fitting is not present.
10) To ensure that once rejected material (on the basis of poor threads, pinholes, casing defects etc means those defects which cannot be removed with rework) is not re-supplied and wasted where deemed necessary
11) Inspections should be carried out by third party inspector throughout the manufacturing process and not merely at completion of production.

12) A complete record of all materials rejected by the third party shall be maintained and provided to SNGPL upon request.

THIRD PARTY INSPECTION ORDER TOR'S

¾" & 1" GAS SERVICE VALVES WITH AND WITHOUT TAILPIECE

Third party inspector will ensure that:-

1) Complete record of Raw Material purchased its conformance certificates/test reports both in-house and outsourced; Quantity received, issued, in stock is maintained and is in concurrence to quantity of finished service valves.
2) Material purchased is virgin and not scrape etc.
3) Chemical composition of the Material of finished service valves are as per tendered specifications. (Results of chemical and metallographic tests must be enclosed with Thrid Party inspection report)
4) Dimensions of service valves are as per tendered specification/drawings.
5) Turning/Operating torque of valve plug is as per SNGPL specifications.
6) At least main body must have trademark of manufacturer.
7) Tailpiece insulation must pass dielectric and strength test as per SNGPL specifications.
8) ¾" & 1" Ø Threads of both inlet & Outlet of valves are as per British Standard Pipe Taper Threads (BSPT) BS-21 or ISO 7-1 or EN 10226-1-2004. Following characteristics of threads must be checked using profile projector etc

   ✓ Truncation of roots and crests are rounded
   ✓ Taper 1°47'

	¾" Thread	1" Thread
✓ Pitch	1.814 mm	2.309 mm
✓ Thread Height	1.162 mm	1.479 mm

   ✓ Included thread angle = 55°
   ✓ Thread faces are free from chattering marks, cutting tool lines, steps etc

9) Fully Machined / Finished Service valves should pass leakage test both in open and close positions as per SNGPL specifications.
10) Forging/casting defects are not present. No sharp/knife edges are present.
11) Any other non-conformance/deviation from specifications which may or may not limit the function appearance or useful life of the fitting is not present.
12) To ensure that once rejected material (on the basis of poor threads, pinholes, casing defects etc means those defects which cannot be removed with rework) is not re-supplied and wasted where deemed necessary
13) Inspections should be carried out by third party inspector throughout the manufacturing process and not merely at completion of production.
14) A complete record of all materials rejected by the third party shall be maintained and provided to SNGPL upon request.

THIRD PARTY INSPECTION ORDER TOR'S

¾" Ø MS 90° SOCKET WELD ELBOW & ¾", 1" Ø MS SOCKET

Third party inspector will ensure that:-

1) Complete record of Raw Material purchased its conformance certificates/test reports both in-house and outsourced; Quantity received, issued, in stock is maintained and is in concurrence to quantity of finished MS Elbows/Sockets.
2) Material purchased is virgin and not scrape etc.
3) Chemical composition of the Material of finished MS Elbows/Sockets are as per tendered specifications. (Results of chemical and metallographic tests must be enclosed with Thrid Party inspection report)
4) Dimensions of MS Elbows/Sockets are as per tendered specification/drawings.
5) Body of both MS Elbows/Sockets must have trademarks of manufacturer.

15) Threads of MS Sockets are as per British Standard Pipe Taper Threads (BSPT) BS-21 or ISO 7-1 or EN 10226-1-2004. Following characteristics of threads must be checked using profile projector etc

- ✓ Truncation of roots and crests are rounded
- ✓ Taper 1°47'

	¾" Thread	1" Thread
✓ Pitch	1.814 mm	2.309 mm
✓ Thread Height	1.162 mm	1.479 mm

- ✓ Included thread angle = 55°
- ✓ Thread faces are free from chattering marks, cutting tool lines, steps etc

6) Fully Machined / Finished MS Elbows/Sockets should pass leakage and strength test as per SNGPL specifications.
7) Forging defects are not present. No sharp/knife edges are present.
8) Any other non-conformance/deviation from specifications which may or may not limit the function appearance or useful life of the fitting is not present.
9) To ensure that once rejected material (on the basis of poor threads, pinholes, casing defects etc means those defects which cannot be removed with rework) is not re-supplied and wasted where deemed necessary
10) Inspections should be carried out by third party inspector throughout the manufacturing process and not merely at completion of production.
11) A complete record of all materials rejected by the third party shall be maintained and provided to SNGPL upon request.

THIRD PARTY INSPECTION ORDER TOR'S

¾" to 4" Ø POLYETHYLENE FITTINGS PE-80 (IMPERIAL SYSTEM)

Third party inspector will ensure that:-

1) Raw material is purchased only form SNGPL's approved suppliers.
2) Complete record of Raw Material purchased its conformance certificates/test reports both in-house and outsourced; Quantity received, issued, in stock is maintained and is in concurrence to quantity of finished P.E Fittings.
3) Material purchased is virgin and not scrape etc.
4) Chemical Composition, Density & Melt Flow Index of the Material of finished P.E Fittings are as per tendered specifications. (Results must be enclosed with Third Party Inspection report)
5) Hydrostatic test as per BGC/PS/PL2 part 1 clause 6.3, table 6 of BGC.
6) Dimensions of P.E Fittings are as per tendered specification.
7) All P.E Fittings must have trademarks of manufacturers (preferably molded in die although sticker labels are also acceptable).
8) Fully Machined / Finished P.E Fittings should pass leakage and strength test as per SNGPL specifications.
9) Molding/Machining defects should not be present. P.E Fittings should have uniform bright yellow color.
10) Foreign material is not present in P.E Fittings. No cracks are present in P.E Fittings.
11) Any other non-conformance/deviation from specifications which may or may not limit the Function, Appearance or Useful Life of the fitting is not present.
12) To ensure that once rejected material (on the basis of poor threads, pinholes, casing defects etc means those defects which cannot be removed with rework) is not re-supplied and wasted where deemed necessary
13) Inspections should be carried out by third party inspector throughout the manufacturing process and not merely at completion of production.

P.E SELF TAPPING TEES

In addition to above P.E SELF TAPPING tees must be checked for

14) The inner side of the punch/shell cutter must have female threads to hold the main Pipe coupon after cutting.
15) Shell cutter should be free from rust, damage, cracks, misalignment and poor finishing.
16) Shell cutter turning torque should not exceed normal hand tightening limits i.e 3-5 lb-ft.
17) Gas leakage through punch/shell cutter threads and tee female threads should be minimum so that cap can be mounted easily.

STEEL PIPE TO POLYETHYLENE PIPE TRANSITION FITTINGS

In addition to above P.E Transition Fittings must be checked for

18) P.E Pipe (& MS) Pipe must be checked for injurious defects such as foreign inclusions/contamination, kinks, visible cracks, voids, crazing which reduce min. wall thickness of pipe.
19) Pull out test min. value > 3 KN.
20) ¾" & 1" Ø Threads of steel side of transition fittings are as per British Standard Pipe Taper Threads (BSPT) BS-21 or ISO 7-1 or EN 10226-1-2004. Following characteristics of threads must be checked using profile projector etc

- ✓ Truncation of roots and crests are rounded
- ✓ Taper 1°47'

	¾" Thread
✓ Pitch	1.814 mm
✓ Thread Height	1.162 mm

- ✓ Included thread angle = 55°
- ✓ Thread faces are free from chattering marks, cutting tool lines, steps etc

21) A complete record of all materials rejected by the third party shall be maintained and provided to SNGPL upon request.
22) Ensure paint coating thickness and quality of transition pieces as per specification.
23) Transition fittings must be checked for misalignment, socket weld and steel/plastic deformation
24) Transition piece threads must be free from defects such as broken, flat, pressed, chipped off, rusty or U-Shaped etc. Similarly threads size must be checked using BSPT thread gauge.

=

PUBLIC PROCUREMENT REGULATORY AUTHORITY (PPRA) EPADS

1. Scope

Pipe supplied under these specifications shall be Product Specification Level 1, electric resistance welded or high frequency electric induction welded without the addition of extraneous material, or spiral welded, non-expanded or cold expanded conforming to the requirements of API Specification 5L Grade B (Latest Edition) and/or other Company's specific requirements set out in these specifications. Wherever the specific requirements differ from API 5L Grade B (L245), the specific requirements shall prevail.

2. Material

2.1 The composition of pipe furnished to these specifications as determined by heat analysis shall conform to the chemical requirements of grade B (L245) material for seam welded non-expanded or cold expanded.

2.2 The manufacturer shall submit reports on Ladle analysis of each heat of steel used in the manufacture of pipe furnished on the order.

2.3 Pipe furnished to these specifications shall conform to following Yield and Tensile requirements:

Minimum Yield Strength	245 MPa (35,500 psi)
Ultimate Tensile Strength	415 MPa (60,200 psi)
Elongation	As per API 5L

2.4 The manufacturer of pipe shall provide to SNGPL inspectors, Mill Test Certificate and other documentary evidence to the purchase of raw material.

2.5 Any document provided by the manufacturer to SNGPL inspectors shall bear manufacturer's signatures, stamp and date of handing over the certificates and other documents.

2.6 The bidder shall manufacture the pipe at the premises which was visited by SNGPL or its representative at the time of prequalification.

3. Process of Manufacture

Pipes furnished to this specification shall be of NPS ¾, NPS 1, NPS 2 and NPS 4, and shall be seam welded by electric resistance welding or high frequency electric induction welding without the addition of extraneous metal. For NPS 4, it may be spiral welded also.

4. Dimensions, Weight, Lengths, Defects and Finishes

Diameter The tolerance for Diameter and out of roundness shall be within the tolerance specified in latest edition of API 5L.

OD measurement shall be conducted in accordance with API 5L measurement provisions. The plus tolerance on OD shall be measured by passage over ends of ring gauge of that size: the minus tolerance on OD shall be measured by an instrument capable of measuring actual minimum OD.

Diameter measurements, out of roundness and frequency of measurement shall also conform to the latest edition of API 5L.

Wall Thickness Each length of pipe shall be measured for conformance to the specified wall thickness requirements. The wall thickness at any location shall be within tolerance specified in API 5L except that the weld area shall not be limited by the plus tolerance. Wall thickness, measurements shall be carried out in accordance with latest edition of API 5L.

Weight Para 10.2.9 of API 5L shall apply.

Approved by Specification Committee

11. Heat Treatment

For electric welded pipe, the weld seam shall be heat treated or the pipe shall be processed in such a manner that no untempered martensite remains as laid down in API 5L Standards.
Confirmation to this effect shall be made by subjecting to metallographic examination, at least once per operating shift plus one for each heat if coils of different heats are used during the operating shift for the same thickness and diameter of the pipe. The results of metallographic examination indicating existence of untempered martensite in the structure shall cause rejection of the lot manufactured from that heat.

12. Non-Destructive Inspection (NDI)

The weld seam of all ERW pipes shall be continuously inspected using NDT equipment in accordance with API 5L.

13. Flattening Test

Flattening test shall be carried out in accordance with API 5L.

Approved by Specification Committee

14. Yield & Tensile Strength Tests

SNGPL or its authorized representatives shall select at his discretion a sample from either each coil or from coils made from same heat of material (manufacturer shall submit heat reference no. and relate these to coils) for yield and tensile test on the material for each size of pipe ordered.

15. Delivery Allowance

The delivery allowance on total quantity shall be 0 to + 0.5 %.

16. Documents

The manufacturer shall furnish to the company or its authorized representative a certificate of compliance stating that the material has been manufactured, sampled, tested and inspected in accordance with this specification and has been found to meet the requirements along with source of raw material.

17. In-House Quality Control

The manufacturer shall submit along with its offer an in-house quality control program giving following details:

17.1 Number of personnel engaged in quality control giving their names, qualifications and experience.

17.2 Vernier Calipers and micrometers with quantity, make and capacity.

17.3 Weighing scales suitable for weighing pipes along with capacity, make and quantity.

17.4 Bevel gauges for measuring angles of bevel.

17.5 Equipment for carrying out flattening test.

17.6 Type, make and capacity of pressure gauges installed on hydrostatic testing equipment.

17.7 Wherever applicable, the manufacturer shall submit documentary evidence of last testing and calibration of instruments and gauges.

17.8 Inspection Certificates duly signed and stamped by the manufacturer and Third-Party Inspector will be provided as per requirement of Standard EN 10204 clause 3.1 or 3.2.

18. Selection of Samples

Selection of samples for undertaking various tests as per API will be at the discretion of purchaser or his representative. The purchaser reserves the right to select the laboratories where these tests will be conducted. All tests conducted at independent laboratories shall be at purchaser's cost.

19. Third-Party Inspection

19.1 The Company shall arrange, at its own cost, an independent third-party inspection to inspect the pipe at manufacturers' premises during manufacture and at the time of shipment. This inspection will, however, not absolve the manufacturer to manufacture the pipe and carry out quality control in accordance with the requirement of this specification.

19.2 SNGPL as purchaser reserves the right to inspect the stores at any time even though these may have been inspected by the inspection personnel and may reject any quantity of pipe in any size at any stage, found not meeting the requirements of the laid down standards. The manufacturer shall replace such defective and sub-standard pipes at its own risk and cost.

19.3 The inspectors representing SNGPL shall have unrestricted access at all times while work on the contract of SNGPL is being performed, to all parts of the manufacturer's works and take photographs wherever necessary that will concern the manufacture of pipe ordered. The manufacturer shall afford the inspector all reasonable facilities to satisfy the inspector that the pipe is being manufactured in accordance with this specification.

The manufacturer is responsible for complying with all of the provisions of this specification. SNGPL may make any investigation necessary to assure compliance by the manufacturer and may reject any material that does not comply with this specification. Material that shows defects on inspection or subsequent to acceptance at the manufacturer's works, or material that proves defective when properly applied in service, may be rejected and the manufacturer so notified. The manufacturer shall replace all such defective and sub-standard pipes at its own risk and cost.

19.4 The manufacturer is required to extend full cooperation to inspection Personnel thus engaged by the company.

Approved by
Specification Committee

PUBLIC PROCUREMENT REGULATORY AUTHORITY (PPRA) EPADS

1. Scope & Purpose

This specification covers Polyethylene (PE-80) fittings including Socket Fusion Fittings, Saddle / Service Saddle Fittings and Butt Fusion Fittings for gas distribution systems. Material classification PE-80 corresponds to Minimum Required Strength (MRS) 8.0 MPa in accordance with ISO 9080. Fittings shall comply with ASTM D2513.

2. Applicable Standards & Codes

ASTM D2513; API 15LE; ASTM D2683; ASTM D3261; ASTM D2122; ASTM D2000; ISO 9080; ISO 1167; ISO 13479; ISO 14377; ISO 1133; ISO 6259; EN 12099. The latest standards shall be applicable. In case of conflict, ASTM D2513 shall govern for dimensional and qualification requirements.

3. Service Conditions

Service Fluid: Natural Gas
Application: Buried gas distribution pipelines
Pipe System: Medium Density Polyethylene (PE-80)
Fusion Types: Socket Fusion, Butt Fusion, Saddle Fusion

4. Technical Requirements

- Socket fusion fittings shall conform to ASTM D2683 and ASTM D2513. Dimensions and tolerances shall be verified in accordance with ASTM D2122.
- Butt fusion fittings shall conform to ASTM D3261 and ASTM D2513. Dimensions shall be measured in accordance with ASTM D2122
- Saddle fittings shall comply with ASTM D2513. Gasket material shall be NBR conforming to ASTM D2000 and suitable for natural gas service.

5. Specific Requirements

Polyethylene Thermoplastic Fittings for installation on MDPE Pipe of SDR 10/11 produced from PE-80 resin. Fittings should be molded from PE-80 resin approved by the Company or resin having USA origin conforming to requirement of PE-80 and should be compatible for heat fusion with any pipe manufacturer from like or similar resin. The fittings should be stabilized against the effects of UV radiation, having following properties.

Property	Standard	Value	Units
MRS Classification	ISO 9080	8.0	MPa
Melt Flow Rate	ISO 1133	0.5 to 1.0	g/10 min
Density	ISO 1183	0.927 to 0.944	g/cm³
Tensile Strength at Yielding	ISO 6259	17 – 21	MPa
Elongation at Break	ISO 6259	≥ 350	%
Volatile Content	EN 12099	≤ 350	ppm
Oxidation Induction Time	ISO 11357	≥ 20 at 200°C	minutes
Resistance to Weathering	ISO 4437-1	≥ 350	GJ/m²
a) Elongation	ISO6259	>350	%
b) Hydrostatic Strength at 80°C	ISO1167-1	≥ 1000 hr at 80° C	hour
Pigment Dispersion	ISO 18553	Category A (A1 – A3)	No agglomerates >100 µm
Slow Crack Growth	ISO 13479	>500	Hours
Rapid Crack Propagation (RCP) S4	ISO 14377	Pc > 1.5 x MOP	-

Note: Test certificates, duly verified by 3rd Party Inspector, to be provided at the time of delivery.

Approved by
Specification Committee

Description	Type of Fusion	Size
Polyethylene Elbow	Socket	¾" x 90° & 1¼" x 90°
Polyethylene Elbow	Butt	2" x 90° & 4" x 90°
Poly Cap	Socket	¾" & 1¼"
Poly Cap	Butt	2" & 4"
P.E. External Coupling	Socket	¾", 1¼" & 2"
P.E. Red. Coupling	Socket / Socket	2" x 1¼"
P.E. Red. Coupling	Butt / Socket	4" x 1¼"
P.E. Red. Coupling	Butt / Butt	4" x 2"
P.E. Equal Tee	Socket	1¼"
P.E. Equal Tee	Butt	2" & 4"
Tapping Tees Reducing	Saddle/Socket	1¼" x ¾"
Tapping Tees Reducing	Saddle/Socket	2" x ¾"
Tapping Tees Reducing	Saddle/Socket	4" x ¾"
Tapping Tees Reducing	Saddle/Socket	2" x 1¼"
Tapping Tees Reducing	Saddle/Socket	4" x 1¼"
Tapping Tees Reducing	Saddle/Butt	4" x 2"

Self-Tapping Tees:

Self-tapping tee should be provided with suitable punch size. All tapping tees should have rectangular base. The inner side of the punch must have female threads to hold the main Pipe coupon after cutting. Suitable Sealing gasket / o rings etc should be provided in completion Cap or tapping tee body for leak tight connection between cap and body.

Main / Saddle Size	Branch Size	Branch Fusion Type
1¼" IPS	¾" IPS	Socket
2" IPS	¾" IPS	Socket
4" IPS	¾" IPS	Socket
2" IPS	1¼" IPS	Socket
4" IPS	1¼" IPS	Socket

Rubber Gasket / O-Ring

Gaskets should be made using base polymer NBR suitable for natural gas service, having following properties:

Property	Value	Unit	Standard
Hardness	60 – 70	Shore A	ASTM D2240
Tensile Strength	≥ 10	MPa	ASTM D412
Elongation at Break	≥ 250	%	ASTM D412
Specific Gravity	1.2 ± 0.05	-	ASTM D297
Compression Set 22 hrs @ 70°C	≤ 25	%	ASTM D395 Method B

Approved by Specification Committee

6. Inspection & Testing

Material Test Certificates of resin and Rubber Gaskets to be provided at the time of delivery. Visual inspection and dimensional verification shall be carried out at in-house testing lab.

7. Printed Literature

Original printed literature must accompany the bid.

8. Sample Submission

1. The bidders who have not supplied quoted type of Polyethylene (MDPE) Fittings to the Company against any purchase order during the last 5 years shall submit 10 No. non-refundable samples of offered PE Fittings with along with the bid. Provided samples must comply with all clauses of technical specifications.
2. The bidders who have already supplied quoted type of Polyethylene (MDPE) Fittings to the Company against purchase orders during the last 5 years are exempted from submission of Samples.

Approved by
Specification Committee

PUBLIC PROCUREMENT REGULATORY AUTHORITY (PPRA) EPADS

1. Scope

This specification is applicable for pipe diameters ranging from 3/4 inch to 4 inch made from PE80/Medium Density Polyethylene raw material for buried pipeline carrying Natural Gas at pressure 4 Bar.

2. References

Latest versions of the following standards are applicable:

ISO 4437	Buried polyethylene pipe for the supply of gaseous fuels.
ASTM D-2513	Standard specification for thermoplastic gas pressure pipe. (Applicable only for nominal diameter & wall thickness).
BG/PS/PL2 Part 1	PE pipes and fittings for natural gas and suitable Manufactured gas pipes.

3. Material Requirement

3.1 The compound used to manufacture pipes shall comply with ISO 4437. The natural polymer may be blended with additives like antioxidants, UV stabilizers, pigments, etc. strictly necessary for the manufacturing, fusion, jointing and use of pipe complying with relevant standards.

3.2 Raw Material Properties:

Property	Test Method	Typical Value	Units	Test Frequency	Batch Release Test (BRT) Resin Manufacturer	Process Verification Test (BRT) Resin Manufacturer
Melt Flow Rate (5kg/190/10min)	ISO 1133	0.5 to 1.0	g/10 min	Once	Each Batch	
Density	ISO 1183	0.927 to 0.944	g/cm³	Once	Each Batch	
Tensile Strength at Yielding	ISO 6259-1	15 to 21	MPa	Once	Each Batch	
Elongation at Break	ASTM D-638/ ISO 527	>400	%	Once	Each Batch	
Volatile Content	EN 12099	≤ 350	mg/Kg	Once	Each Batch	
Oxidation Induction Time	ISO 11357-6	≥ 20 at 200°C	min	Once	Each Batch	
Resistance to Weathering	ISO 4437-1	≥ 350	GJ/m²	Once		Every 2 year
a) Elongation	ISO6259	>350	%	Once		
b) Hydrostatic Strength at 80°C	ISO1167-1	≥ 1000 hr at 80° C	hour	Once		
Pigment Dispersion	ISO 18553	A1,A2,A3 or B	Rate of Appearance	Once	Each Batch	
Resistance to Slow Crack Growth or Environmental Stress Crack Resistance	ISO13479	>500	Hours	Once		Every 1 year
Rapid Crack Propagation (RCP) S4	ISO 14377	Pc > 1.5 MOP	bar	Once		Every 5 year
Minimum Required Strength	ISO 9080	8	MPa	Once		Once

Approved by Specification Committee

3.3 Approved manufacturer of Yellow PE 80 Raw materials for Gas Pipe and fittings;

1- BP Solvey (INEOS)
2- ATOFINA S.A- (TOTAL)
3- Basell Polyolefine GmbH
4- Borealis A.B.
5- Borouge-PE80 Borsafe ME 3441, Abu Dhabi.
6- For offering Pipe with raw material other than above listed sources, the bidder should provide the followings along with the bid for evaluation/approval of source/brand.

- All test report from renowned/independent laboratories for yellow PE-80 raw material conforming above tabulated specifications.
- Detail of manufacturing experience for quoted brand as per requirement of tender enquiry.
- At least five end user references for **Yellow PE resin related to natural gas utility Company.**

4. Physical Requirement

4.1 Dimensions:

Nominal Size Inches	SDR	Avg. OD Inches	Min. WT Inches	Coil/Joint Length (Mtrs.)	Weight (lb/ft)
¾	11	1.05	0.095	100	0.124
1	11	1.315	0.120	100	0.194
1¼	10	1.66	0.166	100	0.340
2	11	2.375	0.216	100	0.630
4	11	4.500	0.409	12	2.280

4.2 All pipes manufactured shall comply with latest relevant standards as stipulated in clause 2 of this specification.

4.3 Colour of the pipe shall be **Bright Yellow**

4.4 The internal and external surface of the pipe shall be smooth, clean and free from grooving and other defects which might impair its functional properties.

4.5 The ends of the pipe shall be cleanly cut and square with the pipe length and provided with end caps.

4.6 The pipe shall be homogeneous throughout and uniform in colour, opacity, density and other physical properties.

4.7 Additives shall be adequately dispersed throughout the pipe. Colour compounded by only Raw material manufacturer and not by pipe manufacturer.

4.8 2% of the Coil Length may be delivered in coils of 50 to 99 meters. This would be applicable for the total tendered quantity for each size. Such coils / lengths must be tagged, indicating the specific length.

4.9 The standard length of 4" Dia pipe is 12 Mtrs. However, 2% of the total quantity may be delivered in length between 8 to 12 meters, and such lengths must be tagged, indicating the specific length.

4.10 The delivery allowance on total quantity shall be ± 1%

4.11 Manufacturer is required to reconcile virgin resin usage with each lot clearly disclosing opening & closing balance, quantity used for manufacturing of pipe along with batch # of resin as mentioned in resin packing. A separate reconciliation sheet is mandatory for each consignment.

Approved by
Specification Committee

5. Performance Requirement

Test Description	Test Method	Typical Value	Units	Test Frequency
Melt Flow Rate (5kg/190/10min)	ISO 1133	0.5 to 1.0	gm/10 min	At start of each Batch
Density	ISO 1183	0.927 to 0.944	gr/cm³	At start of each Batch
Tensile Strength at Yielding	ISO 6259	15 to 21	MPa	Once every 8 hours or once /coil, whichever is less frequent
Elongation at Break	ISO 6259	>400	%	Once/hour or once/coil, whichever is less frequent
Outside Diameter	ASTM D2513	As per ASTM 2513	In/mm	Once/hour or once/coil, whichever is less frequent
Wall Thickness	ASTM D2513		In/mm	Once/hour or once/coil, whichever is less frequent
Out of roundness	ASTM D2513		mm	Once/hour or once/coil whichever is less frequent
Ovality	ASTM D2513		%	Once/hour or once/coil whichever is less frequent
Short Term Hydrostatic Pressure Test	BGC/PS/PL2 part-1 clause 6.3 table 6	24 bars for 1 hour 32 bars for 5 second	Bars/hour	Once every 8 hours or once / Consignment, whichever is less frequent
Heat Reversion Test	ISO 2505-1/2	≤ 3%, no effect on surface when test in glycerin bath at 110°C	%	Once every 8 hours or once / Consignment, whichever is less frequent

6. On-line Monitoring

The manufacturer should preferably have on-line monitoring of weight per meter, wall thickness and diameter. Data of the above under production pipe should be available with the manufacturer.

7. Marking

Marking shall be in accordance to ISO 4437. However, marking of purchase order No. & "**SNGPL** is also required in addition to minimum requirement of ISO 4437.

8. Certification

The manufacturer shall furnish with each lot or shipment at the time of delivery, two copies of certification that such lot or shipment of pipes meet all the requirement of this specification. Also, certification shall contain the following.

i. Manufacturer code (s) as marked on pipe included in shipment.
ii. Test result indicating physical dimensions, one-hour sustainable pressure, minimum tensile and yield strength, longitudinal heat reversion and elongation at break.

Inspection Certificates duly signed and stamped by the manufacturer and Third-Party Inspector will be provided as per requirement of Standard EN 10204 clause 3.1 or 3.2.

Approved by Specification Committee

9. ISO 9001 Registration Certificate

The manufacturer shall attach a valid ISO 9001:2015 (or latest) accreditation certificate with his offer.

10. Printed Literature

Original printed literature must accompany along with bid.

Approved by
Specification Committee

PUBLIC PROCUREMENT REGULATORY AUTHORITY (PPRA) EPADS

1. Scope & Purpose

This specification covers the design, materials, welding, inspection, testing and documentation requirements for stub-on type Gas Service Tees (¾" and 1") intended for welding onto API 5L Grade B feeder mains operating at a Maximum Allowable Operating Pressure (MAOP) of 150 psig. The tees shall be suitable for hot tapping operations using Mueller E5 or D5 drilling machines (or equivalent). Dimensions shall strictly conform to Drawing No. M-332 dated 24-03-2009.

2. Intended Application

Used for making service connections on distribution mains under full line pressure. The design shall permit the following operations under full line pressure:

a) Drill the main
b) Insert completion plug
c) Extract completion plug
d) Shut off service using rubber shut-off tool to permit re-welding of tee connection.

3. Applicable Standards

ASME B31.8, API 5L, ASTM A105, ASME B1.20.1, EN 10204, EN 1982 and Drawing No. M-332 dated 24.03.2009.

4. Environmental & Operating Conditions

Maximum working pressure 150 psig; Test pressure 225 psig.

5. Functional Requirements

Must permit drilling, insertion/extraction of plug, and shut-off under live gas. The service tee shall be designed such that, when welded to API 5L Grade B line pipe in accordance with ASME B31.8, the branch connection can satisfy the reinforcement requirements of ASME B31.8 for openings in piping.

6. Design & Construction Requirements

The dimensions of the Service Tee components shall be made in accordance with Drawing No. M-332 dated 24.03.2009.

The Service Tee shall comprise the following parts:

Body: Forged carbon steel conforming to ASTM A105; Bevel End 30°, +5°, -0°.

Plug: Copper alloy conforming to EN 1982 Grade CC491K (or equivalent).

Cap: Cast iron conforming to ASTM A126 Class B. Cap shall withstand MAOP conditions and mechanical handling during installation.

All threaded portions (boss, plug, cap) shall conform to ASME B1.20.1 (NPT).

Thread pitch and geometry shall match Drawing M-332 dated 24-03-2009.

7. Inspection & Testing Requirements

Leakage test shall be done without sealant. Visual inspection and dimensional verification shall be carried out at in-house inspection lab.

8. Documentation Requirements

Drawings, technical literature/brochure & test certificates with delivery as per EN 10204 Type 3.1 including material test reports (MTR), chemical composition, mechanical properties and hydrostatic test confirmation.

Approved by
Specification Committee

9. Marking & Traceability Requirements

Permanent marking of size and manufacturer name/trademark.

10. Packing, Transport & Storage Requirements

25 Nos. pieces of ¾" Tees and 15 Nos. Pieces of 1" Tees in 1 box. Packing suitable to prevent damage during handling, transport, and storage.

11. Deviations & Compliance

Clause-by-clause commentary against technical specifications.

12. Sample

a) Bidders who have not supplied Gas Service Tees to the Company against any purchase order during the last 5 years shall submit 10 Nos. samples of Gas Service Tees along with the bid. Provided samples must comply with all clauses of technical specifications.

b) The bidders who have already supplied successfully Gas Service Tees to the Company during the last 5 years against previous purchase orders, including trial order, are exempted from submission of samples.

Approved by
Specification Committee

PUBLIC PROCUREMENT REGULATORY AUTHORITY (PPRA) EPADS

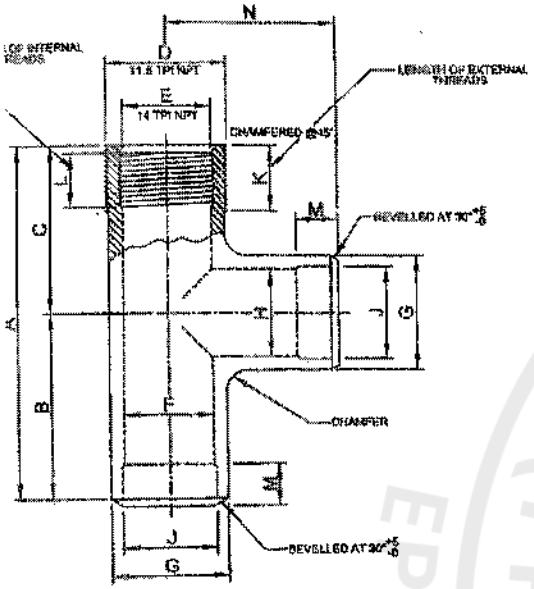

TEE
(FORGED CARBON STEEL)

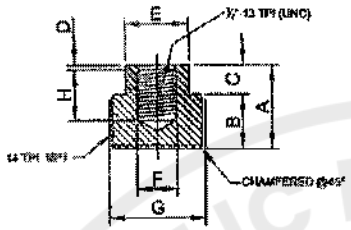

SECTION A-A

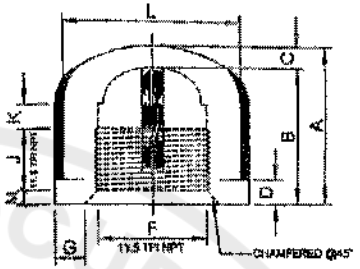

PLAN
(FORT PLUG)
PLUG
(BRASS)

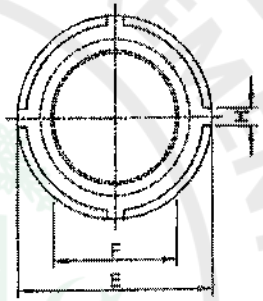

CAP
(HIGH DUTY CAST IRON)

PLAN
(FOR 3/4" PLUG)
PLUG
(BRASS)

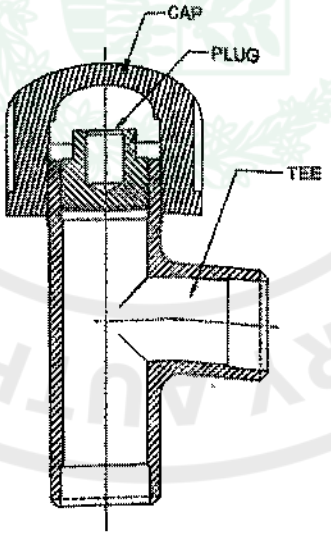

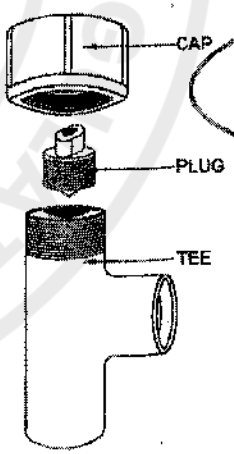

ASSEMBLY DETAIL

SCHEDULE OF DIMENTIONS

TEE

DESCRIPTION	A	B	C	D	E	F	G	H	J	K	L	M	N	G
1" TEE	4 1/8	2 3/8	1 11/16	1.660 DIA.	1.660 DIA.	1/2 DIA	1 1/16 DIA	13/16 DIA	1 1/16 DIA	11/16	1/2	1/2	15/16	3/4
3/4" TEE	4	2 1/8	1 1/8	1.315 DIA.	0.840 DIA.	1/2 DIA	1 1/16 DIA	13/16 DIA	13/16 DIA.	1/2	1/2	7/16	15/16	3/4

PLUG

1" PLUG	1	1/2	1/2	1/2	13/16	1/2 DIA	1.050 DIA.	1/2	13/16 DIA					
3/4" PLUG	1	1/2	1/2	1/2	13/16	1/2 DIA	0.840 DIA.	1/2	13/16 DIA.					

CAP

1" CAP	1 15/16	1 1/2	1 1/4	1 1/4	25/32 DIA	1.660 DIA.	7/8	1/2	11/16	5/8	29/32 DIA	1/2		
3/4" CAP	1 1/4	1 1/8	7/8	1/2	19/32 DIA	1.315 DIA.	1/2	3/8	1/2	5/8	19/32 DIA	1/2		

DIMENSIONS ARE IN INCHES

GENERAL NOTES:-

1- BODY OF GAS SERVICE TEE TO BE FORGED CARBON STEEL TO ASTM A 105 GRADE II
2- CAP TO BE HIGH DUTY CAST IRON WITH LOW PHOSPHORUS CONTENT TO BS 1452 GRADE 14
3- ALL INTERNAL SURFACES OF TEE TO BE MACHINED

CHEMISTRY COMPLIES WITH ASTM A-105

CARBON	(MAX)	0.31%
MANGANESE	(MAX)	0.90%
PHOSPHORUS	(MAX)	0.05%
SULPHUR	(MAX)	0.05%
SILICON		0.15-0.30%

Approved by Specification Committee

NO.	DATE	DESCRIPTION	DRAWN	CHECKED	VERIFIED	APPROVED

REVISIONS

SUI NORTHERN GAS PIPELINES LTD.
P & D DEPARTMENT

DISTRIBUTION DEPARTMENT

TITLE
GAS SEVICE TEE

M - 332

PUBLIC PROCUREMENT REGULATORY AUTHORITY (PPRA) EPADS

e-Pak Acquisition and Disposal System (EPADS) generated document | © 2026

1. Scope & Purpose

This specification covers the design, materials, dimensional requirements, inspection, testing, and documentation requirements for 2" stub-on type Gas Service Tees intended for welding onto API 5L Grade B feeder mains operating at a Maximum Allowable Operating Pressure (MAOP) of 150 psig. The tee shall be suitable for hot tapping operations using Mueller E5 or D5 drilling machines (or equivalent). Dimensions shall strictly conform to Drawing No. M-332A dated 24-03-2009.

2. Intended Application

Used for making service connections on distribution mains under full line pressure. The design shall permit the following operations under full line pressure:

a) Drill the main
b) Insert completion plug
c) Extract completion plug
d) Shut off service using rubber shut-off tool to permit re-welding of tee connection.

3. Applicable Standards

ASME B31.8, API 5L, ASTM A105, ASME B1.20.1, EN 10204, EN 1982 and Drawing No. M-332A dated 24.03.2009.

4. Environmental & Operating Conditions

Maximum working pressure 150 psig; Test pressure 225 psig.

5. Functional Requirements

Must permit drilling, insertion/extraction of plug, and shut-off under live gas. The service tee shall be designed such that, when welded to API 5L Grade B line pipe in accordance with ASME B31.8, the branch connection can satisfy the reinforcement requirements of ASME B31.8 for openings in piping.

6. Design & Construction Requirements

The Tee should be of forged steel having threads at top with 2½" outside iron pipe threads for cast iron cap and 1½" inside iron pipe threads for steel plug, which should permit the above referred operations to be done under full line pressure with no blowing of gas.

The Service Tee shall comprise the following parts:

Body: Forged carbon steel conforming to ASTM A105; Bevel End 30°, +5°, -0°.

Plug: Copper alloy conforming to EN 1982 Grade CC491K (or equivalent).

Cap: Cast iron conforming to ASTM A126 Class B. Cap shall withstand MAOP conditions and mechanical handling during installation.

All threaded portions (body, plug, cap) shall conform to ASME B1.20.1 (NPT).

Thread pitch and geometry shall match Drawing M-332A dated 24-03-2009.

7. Inspection & Testing Requirements

Leakage test shall be done without sealant. Visual inspection and dimensional verification shall be carried out at in-house inspection lab.

Approved by Specification Committee

8. Documentation Requirements

Drawings, technical literature/brochure & test certificates with delivery as per EN 10204 Type 3.1 including material test reports (MTR), chemical composition, mechanical properties and hydrostatic test confirmation.

9. Marking & Traceability Requirements

Permanent marking of size and manufacturer.

10. Packing, Transport & Storage Requirements

Suitable robust packing for transport.

11. Deviations & Compliance

Clause-by-clause commentary against specifications.

12. Sample

a) Bidders who have not supplied Gas Service Tees to the Company against any purchase order during the last 5 years shall submit 10 Nos. samples of Gas Service Tees along with the bid. Provided samples must comply with all clauses of technical specifications.

b) The bidders who have already supplied successfully Gas Service Tees to the Company during the last 5 years against previous purchase orders, including trial order, are exempted from submission of samples.

Approved by
Specification Committee

PUBLIC PROCUREMENT REGULATORY AUTHORITY (PPRA) EPADS

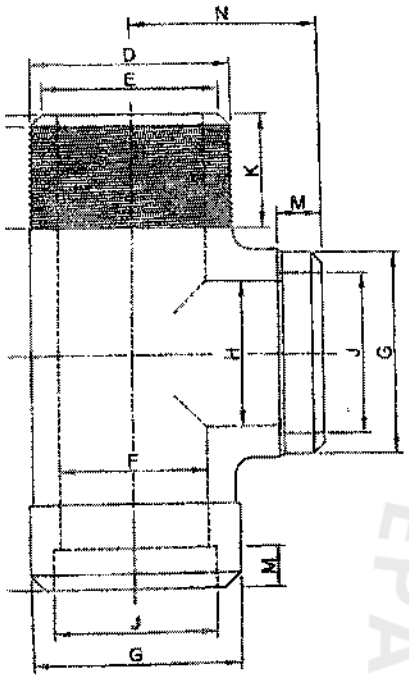

TEE

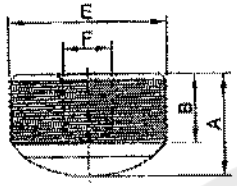

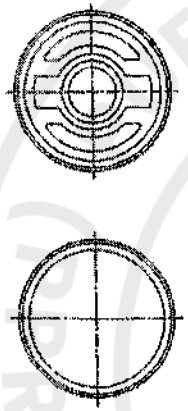

PLUG

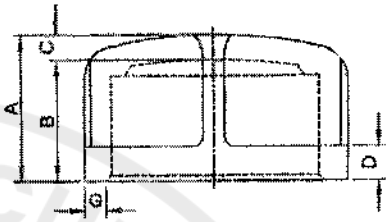

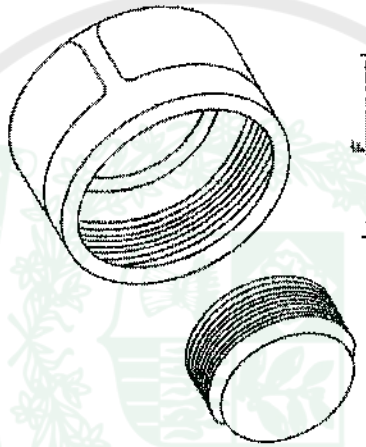

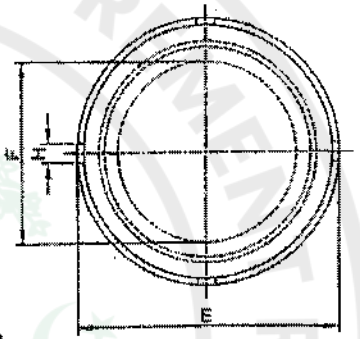

CAP

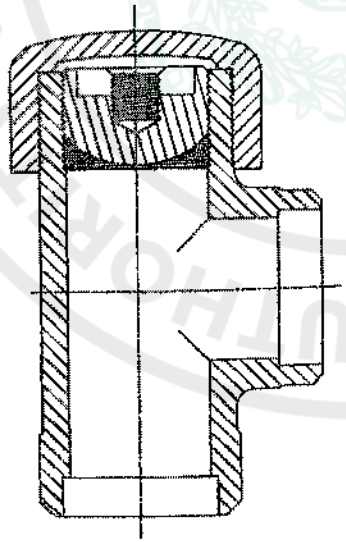

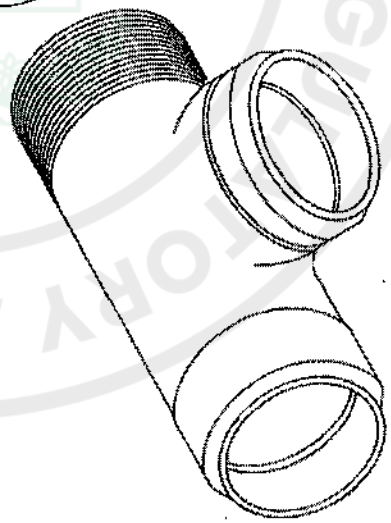

GENERAL NOTES:-

Approved by Specification Committee

SCHEDULE OF DIMENTIONS

TEE

A	B	C	D	E	F	G	H	I	J	K	L	M
[illegible]	2.75	2.77	2.30	1.76	1.75	2.42	1.75	0.29	1.88	0.00	0.69	0.51

PLUG

[illegible]	0.79	-	-	1.869	0.65							

CAP

1.82	1.53	0.28	0.45	0.125	2.21	0.44						

No.	DATE	DESCRIPTION	DRAWN	CHECKED	REVIEWED	APPROVED

REVISIONS

SUI NORTHERN GAS PIPELINES LTD.
P & D DEPARTMENT

DISTRIBUTION DEPARTMENT

TITLE:

2" DIA GAS SERVICE TEE

M-332A

e-Pak Acquisition and Disposal System (EPADS) generated document | © 2026

1. Scope & Purpose

This specification defines the technical, material, dimensional, inspection, testing, documentation, and quality requirements for ¾" (NPS ¾) Gas Service Valves with insulated tail piece intended for shut-off service at Consumer Meter Stations.

2. Applicable Standards

Design, materials, pressure ratings, markings, and test methods shall conform to latest editions of ASME B31.8 and B16.33, unless otherwise specified herein. Dimensions shall be in accordance with the attached drawing no. DM-TD-01-D6-03.

3. Environmental & Operating Conditions

Pressure Class: ASME B16.33 Class 125
Maximum Allowable Operating Pressure (MAOP): 125 psig
Hydrostatic Shell Test Pressure: Minimum 190 psig; test duration as per ASME B16.33.
Valve shall be suitable for outdoor installation under prevailing environmental conditions.

4. Functional Requirements

The valve shall be tamper-proof and capable of smooth operation under live gas pressure conditions. The design shall be tamper-proof to prevent unauthorized removal of plug and hexagonal nut during service.

5. Design & Construction Requirements

Body: Cast gray iron conforming to ASTM A126 Class B.
Plug: Copper alloy conforming to EN 1982 CC491K or ASTM B584 C83600, suitable for gas service.
Washer: High copper brass alloy compatible with plug material.
Hex Nut & Union Coupling: Forged steel ASTM A105.
Sealing surfaces shall be lubricated with petroleum-based grease containing molybdenum disulfide suitable for gas service.
All exposed carbon steel components shall be corrosion protected.
Valve body shall have black protective finish.
Threads: Female ¾" BSPT conforming to ISO 7-1.
Insulated Tail Piece: Zinc plated steel ASTM A105 with integrally molded nylon insulator meeting:

Parameter	Standard	Requirement	Frequency
Dielectric Strength (Flashover Voltage)	ASTM D149	≥ 2 kV	Type Test
Compressive Strength	ASTM D695	80 – 100 MPa	Type Test
Breaking Torque	-	≥135 Nm	100%
Maximum Continuous Operating Temperature	-	60° C	Type Test
Weathering Resistance (UV Exposure)	ASTM G154	No cracking or degradation	Type Test
Water Resistance	ASTM D570	As per standard limits	Type Test
Chemical Resistance	ASTM D543	No degradation after exposure	Type Test

Third-party verified test reports shall be provided.

6. Inspection & Testing Requirements

Each valve shall undergo visual inspection, dimensional verification, hydrostatic test at 190 psig, seat leakage test as per ASME B16.33 at 125 psig with zero visible leakage. Operating torque test to be performed at 20 – 40 lb-ft; minimum five simulated operating cycles shall be performed.

Approved by
Specification Committee

7. Documentation Requirements

Drawings, technical literature/brochures, and test records. Certificates to be provided at the time of delivery shall include pressure test results, material traceability, and inspection records. Inspection certificates shall be provided in accordance with EN 10204 Type 3.1 or 3.2.

8. Marking & Traceability Requirements

Permanent marking of manufacturer identification and valve size.

9. Packing, Transport & Storage Requirements

15 Nos. pieces in 1 box. Packing suitable to prevent damage during handling, transport, and storage.

10. Deviations & Compliance

Clause-by-clause commentary against these technical specifications shall be provided. Any deviation shall be clearly identified.

11. Sample

a) Bidders who have not supplied Gas Service Valves with Tail Piece to the Company against any purchase order during the last 5 years shall submit 10 Nos. samples of Gas Service Valves with Tail Piece along with the bid. Provided samples must comply with all clauses of technical specifications.

b) The bidders who have already supplied successfully Gas Service Valves with Tail Piece to the Company during the last 5 years against previous purchase orders, including trial order, are exempted from submission of samples.

Approved by
Specification Committee

PUBLIC PROCUREMENT REGULATORY AUTHORITY (PPRA) EPADS

e-Pak Acquisition and Disposal System (EPADS) generated document | © 2026

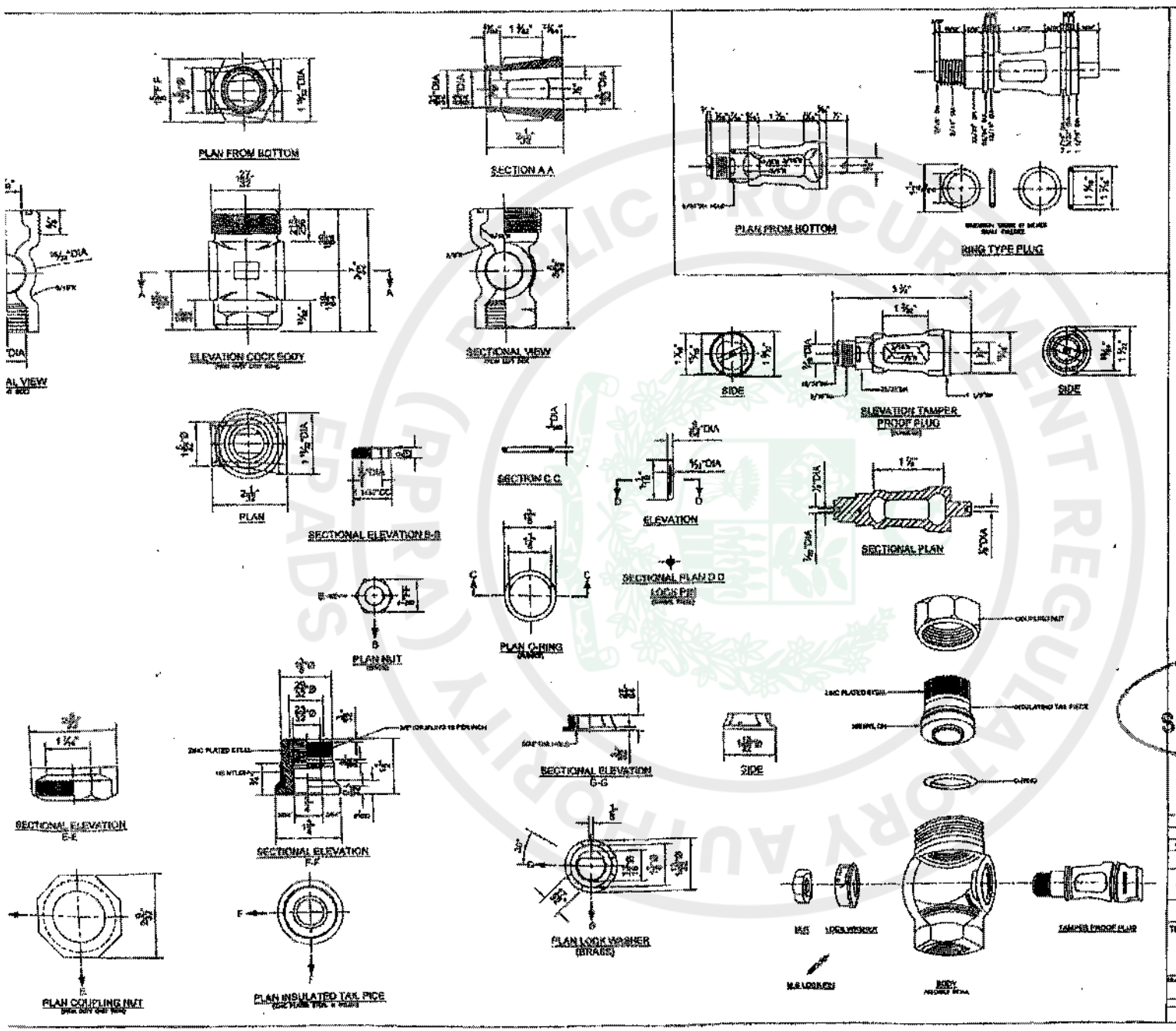

1. Scope & Purpose

This specification defines the technical, material, dimensional, inspection, testing, documentation, and quality requirements for ¾" (NPS ¾) Gas Service Valves without insulated tail piece, intended for shut-off service at Consumer Meter Stations.

2. Applicable Standards

Design, materials, pressure ratings, markings, and test methods shall conform to latest editions of ASME B31.8 and B16.33, unless otherwise specified herein. Dimensions shall be in accordance with the attached drawing no. DLG/101A.

3. Environmental & Operating Conditions

Pressure Class: ASME B16.33 Class 125
Maximum Allowable Operating Pressure (MAOP): 125 psig
Hydrostatic Shell Test Pressure: Minimum 190 psig; test duration as per ASME B16.33.
Valve shall be suitable for outdoor installation under prevailing environmental conditions.

4. Functional Requirements

The valve shall be tamper-proof and capable of smooth operation under live gas pressure conditions. The design shall prevent unauthorized removal of plug and locking components during service.

5. Design & Construction Requirements

Body: Cast gray iron conforming to ASTM A126 Class B.
Plug: Copper alloy conforming to EN 1982 CC491K or ASTM B584 C83600, suitable for gas service.
Washer: Copper alloy compatible with plug material.
Hex Nut & Union Coupling: Forged steel ASTM A105.
Sealing surfaces shall be lubricated with petroleum-based grease containing molybdenum disulfide suitable for gas service.
All exposed carbon steel components shall be corrosion protected.
Valve body shall have black protective finish.
Threads: Female ¾" BSPT conforming to ISO 7-1.

6. Inspection & Testing Requirements

Each valve shall undergo visual inspection, dimensional verification, hydrostatic test at 190 psig, seat leakage test as per ASME B16.33 at 125 psig with zero visible leakage. Operating torque test to be performed at 20 – 40 lb-ft; minimum five simulated operating cycles shall be performed.

7. Documentation Requirements

Drawings, technical literature/brochures, and test records. Certificates to be provided at the time of delivery shall include pressure test results, material traceability, and inspection records. Inspection certificates shall be provided in accordance with EN 10204 Type 3.1 or 3.2.

8. Marking & Traceability Requirements

Permanent marking of manufacturer identification and valve size.

9. Packing, Transport & Storage Requirements

15 Nos. pieces in 1 box. Packing suitable to prevent damage during handling, transport, and storage.

Approved by
Specification Committee

10. Deviations & Compliance

Clause-by-clause commentary against these technical specifications shall be provided. Any deviation shall be clearly identified.

11. Sample

a) Bidders who have not supplied Gas Service Valves without Tail Piece to the Company against any purchase order during the last 5 years shall submit 10 Nos. samples of Gas Service Valves without Tail Piece along with the bid. Provided samples must comply with all clauses of technical specifications.

b) The bidders who have already supplied successfully Gas Service Valves without Tail Piece to the Company during the last 5 years against previous purchase orders, including trial order, are exempted from submission of samples.

Approved by
Specification Committee

PUBLIC PROCUREMENT REGULATORY AUTHORITY (PPRA) EPADS

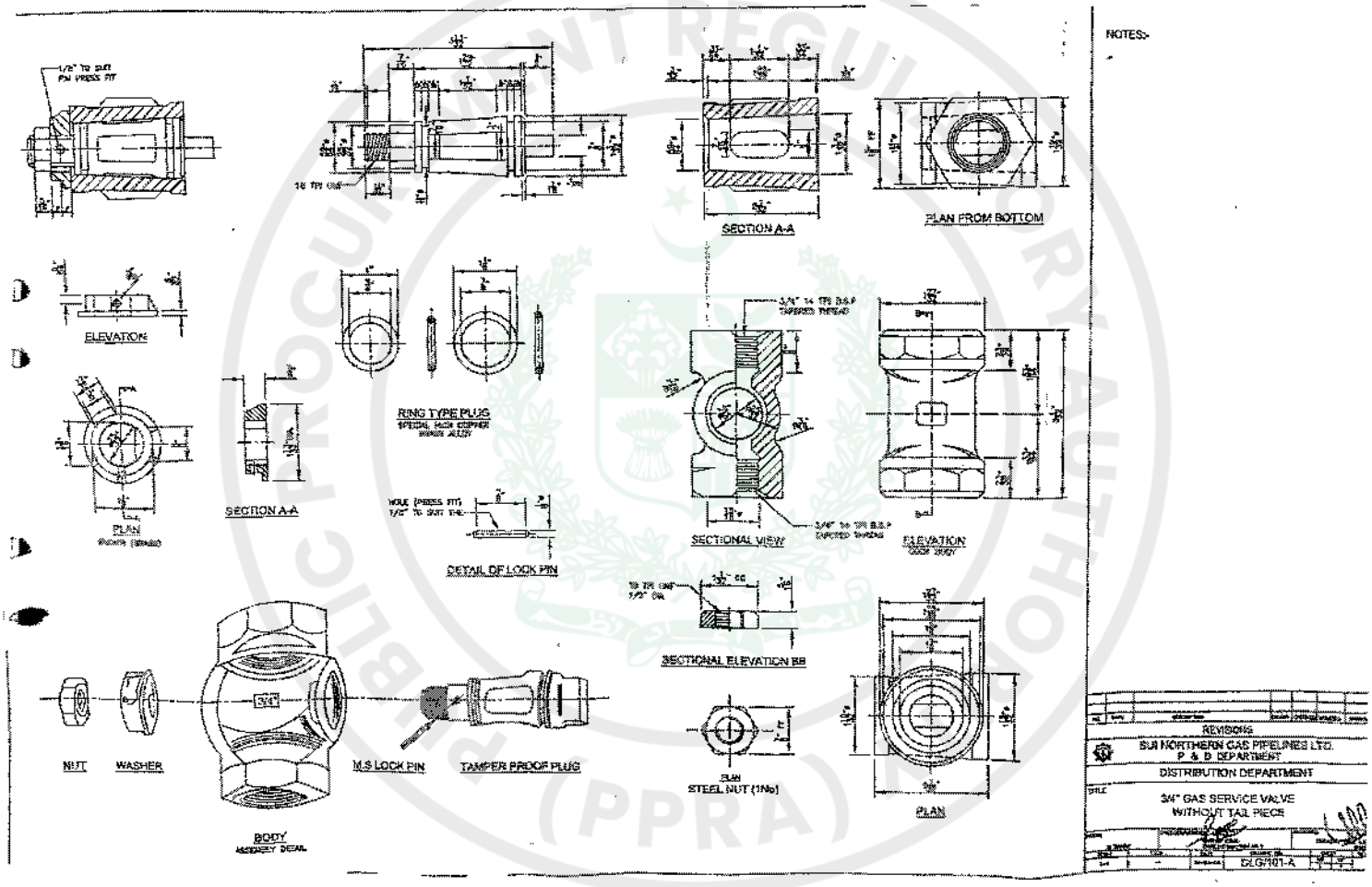

Approved by Specification Committee

PUBLIC PROCUREMENT REGULATORY AUTHORITY (PPRA) EPADS

1. Scope & General Requirement

This specification covers factory assembled steel-to-polyethylene (PE-80) transition fittings for gas distribution systems. PE portion shall comply with ASTM D2513. Steel portion shall comply with API 5L Grade B (latest edition). Finished product shall be threaded as specified herein.

Steel-to-Polyethylene Transition fitting comprises of Carbon Steel & Polyethylene parts and a mechanical joint design that provides a seal plus a resistance to a force on the pipe end equal to or greater than that which will cause permanent deformation of the pipe.

The Transition Fitting shall be such designed, when it is subjected to tensile strength test, the PE part yield zone shall be away from the PE-Carbon Steel Joint. The internal & external surfaces of Transition Fitting shall be smooth and free from scoring, cavities, pipe defects, thread defects, powder coating defects, welding defects and other surface defects likely to impair their strength & performance.

2. Requirement for Steel Part

2.1 ERW carbon steel line pipe conforming with the requirement of API 5L Grade-B (latest edition), BSPT threaded as per ISO 7-1 OR beveled end in accordance with the specifications of MS Grade-B Line Pipe.

2.2 Material for external socket of transition joint shall be Mild Carbon Steel weldable to API 5L Grade B.

2.3 Welding of external socket of transition joint with Carbon Steel Pipe shall be in accordance to API-1104.

2.4 Carbon Steel section of the Transition Fitting shall have external powder protective coating (Corro-Coat PE-F-1307 or Equivalent) with a minimum thickness as recommended by the manufacturer in data sheet of raw material. However, it should not be less than 60 microns & more than 90 microns.

2.5 From pre-treatment to application of powder and its curing times all process must be completed as per recommendations of powder coating manufacturer.

2.6 Zinc Phosphate pre-treatment of steel pipe should be carried out as per 7 – tank process as recommended by Coating manufacturer e.g. JOTUN.
7-Tank Process should consist of following:

1	2	3	4	5	6	7
Degreasing	Pickling	Rinsing	Phosphating	Rinsing	Chromic Acid Sealing	Drying

2.7 Carbon steel pipe should only be procured from SNGPL approved steel pipe manufacturers.

3. Requirement for Polyethylene Part

The Polyethylene Pipe of Transition Fittings shall be manufactured from Yellow PE-80 resin suitable for Natural Gas Applications and should be bright yellow in colour and stabilized against the effects of UV radiation, having following properties. PE pipe should only be procured from SNGPL's pre-qualified PE pipe manufacturers and Polyethylene raw material shall only be procured from manufacturers approved by SNGPL.

Approved by
Specification Committee

4. O-Rings

Two "O"-Rings to be used at two ends of transition joint for gas tight and tamper-proof. Gaskets should be made using base polymer NBR suitable for natural gas service, having following properties:

Property	Value	Unit	Standard
Hardness	60 – 70	Shore A	ASTM D2240
Tensile Strength	≥ 10	MPa	ASTM D412
Elongation at Break	≥ 250	%	ASTM D412
Specific Gravity	1.1 ± 0.1	-	ASTM D297
Compression Set 22 hrs @ 70°C	≤ 25	%	ASTM D395 Method B

5. Dimensions

Nominal Size (Inches)	SDR	Avg. OD (Inches)	Min. WT (Inches)	Weight (lb/ft)
¾"	11	1.05	0.095	0.124
1"	11	1.315	0.120	0.194
1¼"	10	1.66	0.166	0.340
2"	11	2.375	0.216	0.630
4"	11	4.500	0.409	2.280

6. Performance Requirement

Test Description	Test Method	Typical Value	Unit	Test Frequency
Melt Flow Rate (5 kg/190°C)	ISO 1133	0.5 to 1.0	g/10 min	Start of each batch
Density	ISO 1183	0.927 to 0.944	g/cm³	Start of each batch
Tensile Strength at yielding	ISO 527 or ASTM D-638	17 to 21	MPa	Once every 8 hours or Once per coil; whichever is less frequent
Elongation at Break	ISO 527 ASTM D638	>400	%	Once per hour or Once per coil; whichever is less frequent
Outside Diameter	ASTM D2122	as per ASTM D-2513	in/mm	Once per hour or Once per coil; whichever is less frequent
Wall Thickness	ASTM D2122		in/mm	Once per hour or Once per coil; whichever is less frequent
Out of Roundness	ASTM D2122		mm	Once per hour or Once per coil; whichever is less frequent
Ovality	ASTM D2122		%	Once per hour or Once per coil; whichever is less frequent
Short-Term Hydrostatic Pressure Test	ASTM D1598	1.5 x MOP for 1 hour	-	Once every 8 hours or Once per consignment; whichever is less frequent
Heat Reversion Test	ISO 2505-1 or ISO 2505-2	≤3%, no effect on surface when test in glycerin bath at 110°C	%	Once every 8 hours or Once per consignment; whichever is less frequent

Note: Third party shall cross check above mentioned tests for each lot of consignment.

Approved by Specification Committee

7. **Copper/Steel Compression Sleeve Liner**

At the transition portion, a mechanical holding arrangement incorporating a copper or steel compression sleeve/liner shall be provided. The assembly shall be resistant to the action of natural gas under service conditions and shall provide a minimum pull-out resistance not less than the values specified in the table below.

Nominal Pipe Size	Minimum Pull-Out Resistance (N)
¾"	3250
1¾"	4145
2"	8450
4"	30375

Pull-out resistance shall be verified by axial tensile testing at ambient temperature in accordance with ASTM D2513 joint performance requirements. No separation or slippage shall occur below the specified force. Test certificate shall be provided by the manufacturer.

8. **Mechanical Characteristics Requirement**

Characteristics	Requirement	Test Method	No. of Samples
Leak Test	Leak free @ 60 psi (min. for 60 seconds)	Pneumatic leak test using air or nitrogen with soap solution inspection.	All Production
Tensile Pull Out Resistance Test	The assembled fitting shall withstand the specified minimum pull-out force without separation or slippage	Axial tensile pull-out test in accordance with ASTM D2513 joint performance requirements.	One each 5,000 /Batch /Size
Hydrostatic Pressure Test	90 psi for 30 minutes without leakage	ASTM D1598	One each 5,000 /Batch /Size
Hydrostatic Burst Pressure Test	450 psi	ASTM D1599	One each 10,000

Note: Third party shall cross check above mentioned tests for each lot offered for inspection.

9. **Powder Coating Requirement**

Characteristics	Requirement	Test Method	No. of Samples
Impact Resistance	No crack in Coating Film @ 2.5 J	ASTM D-2794	One each 5,000 /Batch /Size
Adhesion Test	Cross Cut rating Gt0 (100% adhesion)	ISO 2409	One each 1,000 /Batch /Size
Salt Spray Resistance Test	No blistering or adhesion loss after 1000 hours	ASTM B117 or ISO 9227 (Neutral Salt Spray Test)	One each 10,000 /Batch /Size
Hardness Test	Indentation Resistance > 80 (Buchholz)	ISO 2815	One each 5,000

Approved by

10. Packaging

10.1 The Steel-to-PE Transition Fittings shall be packaged individually with thread portion protected with plastic cap. They shall be put in plastic bag and sealed and packaged in carton.

10.2 The cartons and/or plastic bags shall bear at least one label with the manufacturers name, type and dimensions of the part, number or units in the carton and any special storage conditions.

11. Marking

All Steel-to-PE Transition Fittings shall be marked with self-adhesive sticker showing:

i. Item Name
ii. Size
iii. Manufacturer name
iv. Purchase Order No.
v. ASTM Standard

12. Threads

12.1 Threads should be protected against corrosion by application of Zinc Phosphating (Matte Black/no luster). Zinc phosphating shall comply with ISO 9717 or coating manufacturer specification.

12.2 Threads shall be BSPT conforming to ISO 7-1 (Pipe Threads Where Pressure-Tight Joints are Made on the Threads) or EN 10226-1.

12.3 The manufacturer is required to certify that the Thread profile of offered G.I. Fittings is strictly in accordance with relevant standard for following characteristics;

- Taper 1°47'
- Truncation of roots and crests are rounded
- Pitch = 1.814 mm
- Thread Height = 1.162 mm
- Included thread angle = 55°

Threads shall be inspected using GO and NO-GO gauges in accordance with ISO 7-1.

13. Size

Pipe Size (Inches)	Length of Steel Line Pipe API 5L (Inches)	Length of PE Pipe (Inches)	Bevel Angle for Steel Pipe	Root Face for Steel Pipe
¾"	18 (0.113" wt.)	18	Threaded	-
1¼" – 1"	12 (1" dia. x 0.133" wt.)	12 (1¼" dia.)	30° + 5°, - 0°	1/16", -1/32"
2"	12 (0.154" wt.)	12	30° + 5°, - 0°	1/16", ±1/32"
4"	12 (0.188" wt.)	12	30° + 5°, - 0°	1/16", -1/32"

14. Printed Literature

Original printed literature must accompany the bid along with Test Reports.

Approved by
Specification Committee

15. Samples

15.1 The bidders who have not supplied Transition Piece to the Company against any purchase order shall submit 10 Nos. samples of quoted Transition Pieces along with the bid. Provided samples must comply with all clauses of technical specifications.

15.2 The bidders who have already successfully supplied quoted type Transition Pieces to the Company during last 05 years against purchase orders including trial order are exempted from submission of Samples.

Approved by
Specification Committee

PUBLIC PROCUREMENT REGULATORY AUTHORITY (PPRA) EPADS

1. Scope & Purpose

This specification defines the technical requirements for ¾" Aluminum Meter Couplings used for connecting Gas Meters at Consumer Meter Stations.

2. Applicable Standards

Materials, construction, dimensions, testing, and workmanship shall conform to this specification and the attached drawings.

3. Environmental & Operating Conditions

Suitable for outdoor installation under prevailing environmental conditions.

4. Functional Requirements

The coupling shall provide a secure and leak-tight mechanical joint.

5. Design & Construction Requirements

Pressure die-casted Aluminum LM2 (BS 1490) or equivalent, along with Rubber Gasket/Washer as per specifications of Gaskets (SNGPL-SPFC-MCGT). Dimensions as per drawing.

6. Inspection & Testing Requirements

Material strength criteria:	Fully machined/finished coupling nipple, when subject to a pressure of 90 psig, should not exhibit any damage/rupture/crack.
Leakage test criteria:	Fully machined/finished coupling nipple should be subjected to a minimum pressure of 10 psig without showing any leakage/seepage.
Flattening test criteria:	Finished Coupling Nuts when subjected to a flattening force by means of suitable arrangement should be able to endure a diameter reduction of 3.5% of the original diameter across flats without cracking.

Visual inspection, dimensional verification, and performance testing shall be carried out at in-house inspection lab.

7. Documentation Requirements

Drawings, technical literature/brochures, and test records.

8. Marking & Traceability Requirements

Permanent marking of manufacturer identification and valve size.

9. Packing, Transport & Storage Requirements

Suitable packing to prevent damage during handling, transport, and storage.

10. Deviations & Compliance

Clause-by-clause commentary against these technical specifications shall be provided. Any deviation shall be clearly identified.

Approved by
Specification Committee

11. Sample

a) Bidders who have not supplied ¾" Aluminum Meter Couplings to the Company against any purchase order during the last 5 years shall submit 05 Nos. samples along with the bid. Provided samples must comply with all clauses of technical specifications.

b) The bidders who have already successfully supplied ¾" Aluminum Meter Couplings to the Company during the last 5 years against previous purchase orders, including trial order, are exempted from submission of samples.

Approved by
Specification Committee

PUBLIC PROCUREMENT REGULATORY AUTHORITY (PPRA) EPADS

TECHNICAL SPECIFICATION

¾" METER COUPLING

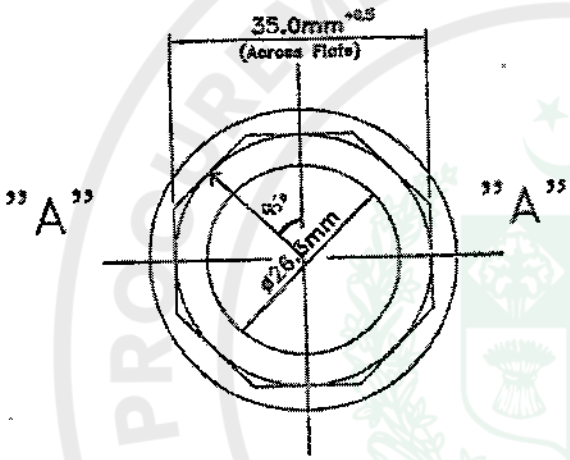

TOP VIEW

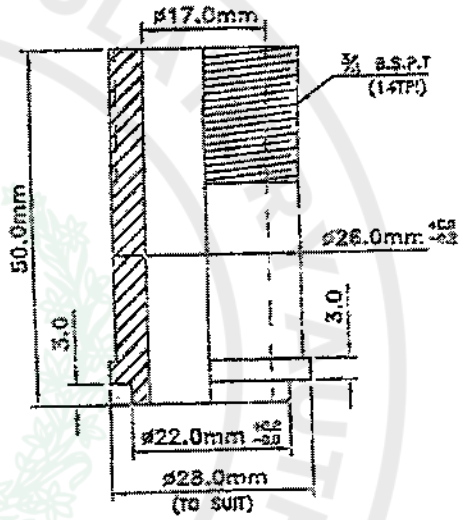

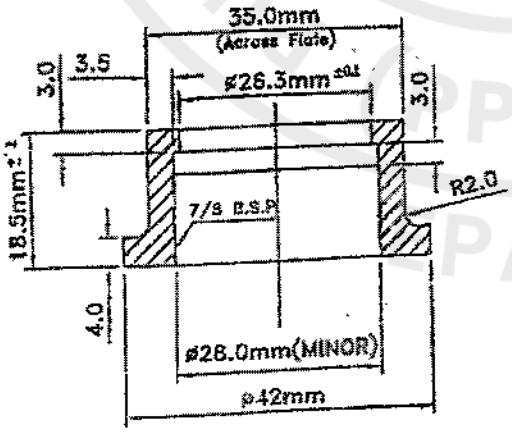

SECTION "A–A"

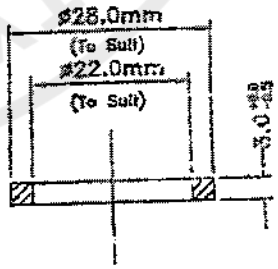

WASHER

Approved by
Specification Committee

SUI NORTHERN GAS PIPELINES LIMITED
MEMORANDUM

From	**Chairman Specification Committee SGM (ES)**	To	**In-Charge (MC-D)**
Ref	**Stores-** ES/889 Date **15.04.2026**	Your Ref	Date
Risk	**High** / Medium / Low	Importance	**Immediate** / Ordinary

SUBJECT: TECHNICAL SPECIFICATIONS

This refers to your following technical specification sent for approval from Specification Committee:

S.No.	Department	Document No.	Subject
1	MC-D	SNGPL-SPFC-DCGR	Domestic Gas Regulators

Enclosed kindly find the subject specifications reviewed and approved by Specification Committee.

Encl. As above.

(Farrukh Majeed)
Sr. General Manager (ES)
Chairman Specification Committee

cc: CIO – Kindly advise the concerned to upload above specifications on Company's Portal under the heading of Approved Specifications. After uploading, kindly intimate us as well as the concerned department also.
cc: All committee members thru email.

PROCUREMENT REGULATORY AUTHORITY (PPRA) EPADS

1. Scope & Purpose

1.1 Description:
Supply of domestic gas pressure regulators reducing inlet pressure (up to 60 psig) to 6–8" WC.

1.2 Boundaries:
Includes regulator body and all internal components including integral relief valve.

1.3 Intended Application:
Residential gas supply systems.

2. References & Standards

2.1 Latest Editions of ANSI B109.4 (or EN 334 equivalent), BS-21 (or ISO 7-1 or EN 10226-1 equivalent)

3. Definitions

WC: Water Column
Lock-up Pressure: Pressure at zero flow
Droop: Outlet pressure variation with flow
Relief Pressure: Pressure at which internal relief activates

4. Environmental Conditions

Temperature: -10°C to 60°C
Humidity: up to 95%

5. Functional Requirements

Inlet Pressure: up to 60 psig
Outlet Pressure: 6–8" WC
Lock-up Pressure: ≤9" WC or +3" WC of set point
Droop: ≤0.6" WC

Capacity:
110 SCFH @ 10 psig
220 SCFH @ 30 psig

Accuracy: ±10%
Turndown: ≥5:1
Configuration: Direct acting

5.1 Performance:
The assembled regulator shall withstand an outlet pressure of 2 psig without leakage, rupture, or permanent deformation of any component.

6. Design & Construction

All pressure-retaining components including diaphragm, casing, and valve assembly shall be designed to safely withstand an outlet pressure of 2 psig without permanent deformation.

6.1 Body Materials:
Aluminium Alloy AA No. 380.0/A380.0 (as per ASTM B85/B85M) or LM2 (as ~~per BS1490~~)

6.2 Mechanical:
Pressure rating: 125 psig
Connections: ¾" BSPT BS-21 or ISO 7-1 or EN 10226-1

Approved by Specification Committee

PUBLIC PROCUREMENT REGULATORY AUTHORITY (PPRA) EPADS

6.3 Diaphragm Assembly:
Smooth casing
1/8" NPT vent (marked VENT) conforming to ANSI B2.1

6.4 Valve Mechanism:
Corrosion resistant
Soft seat Buna-N

6.5 Relief Valve:
Start: 11" WC
Full: 18" WC

6.6 Orifice:
Brass/SS/Aluminum, removable or durable

6.7 Spring:
6–8" WC range, anti-creep screw

6.8 Exterior:
Powder coated, corrosion resistant

7. Quality Assurance

Compliance with applicable standards
Material certificates required

8. Inspection & Testing

FAT shall be conducted by third-party inspection agency.

Tests:
- Visual inspection
- Pressure test
- Functional test (set pressure, lock-up, relief)

ITP required

9. Documentation

Datasheets
Manuals
Certificates

10. Packing

50 pieces per box; box wrapped in thin plastic film for moisture protection.
QR Code on box with the following information:

1. Index Number: 35.001.00002.03.00
2. Quantity in box
3. Purchase Order No.

Approved by Specification Committee

11. HSE

Leak-free operation
Safe venting

PUBLIC PROCUREMENT REGULATORY AUTHORITY (PPRA) EPADS

12. Marking

Regulator Type/Model
Manufacturer
Year of Manufacture
Orifice Size

14. Sample & Factory Visit

The bidders who have not supplied Domestic Gas Regulator to the Company against any purchase order shall submit 10 No. samples of Gas Regulator free of cost (non-refundable) along with the bid for testing. Provided samples must comply with all clauses of technical specifications.

The bidders who have already supplied successfully Domestic Gas Regulators to the Company against purchase orders, including trial order, during the last five years are exempted from submission of Samples.

Factory visit as per tender TOR if applicable.

15. Deviations

All deviations must be declared

16. Compliance

Clause-by-clause compliance required

Prepared by:

Approved by
Specification Committee

1. Scope & Purpose

This specification defines the technical requirements for rubber gaskets used with ¾" aluminum meter couplings.

2. Applicable Standards

ASTM D 2000 or equivalent.

3. Material Requirements

Base Polymer:	NBR
Hardness:	Shore A 60 – 70
Specific Gravity:	1.1 ± 0.1
Tensile Strength:	minimum 10 MPa
Elongation at break:	minimum 250%
Compression:	maximum 25% at 70°C for 22 hours

4. Thermal Requirements

Minimum continuous temperature:	-10°C
Maximum continuous temperature:	+70°C
Maximum intermittent temperature:	+90°C

5.Inspection & Testing Requirements

Following Test Certificates, duly verified by 3rd Party Inspector, required from manufacturer.

a. Compression
b. Thermal requirements

Visual inspection, dimensional verification, and performance testing shall be carried out at in-house inspection lab.

6. Dimension Requirements

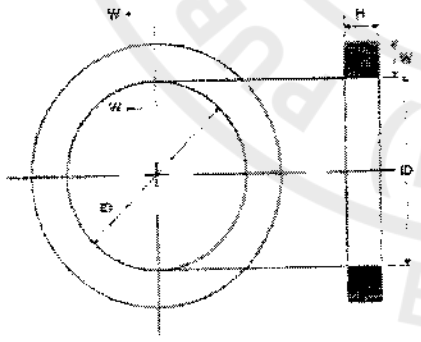

ID	H	W
22 mm	03 mm	03 mm

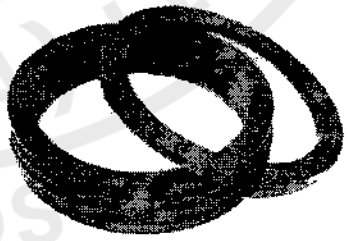

7. Documentation Requirements

Drawings, technical literature/brochures, and test records.

8. Packing, Transport & Storage Requirements

Suitable packing to prevent damage during handling, transport, and storage.

Approved by Specification Committee

9. Deviations & Compliance

Clause-by-clause commentary against these technical specifications shall be provided. Any deviation shall be clearly identified.

10. Sample

20 Nos. samples of offered item should be provided with the quotation/bid.

Approved by
Specification Committee

PUBLIC PROCUREMENT REGULATORY AUTHORITY (PPRA) EPADS

ANNEX-D

INTRODUCTION OF THE BIDDER

(Page 1 of 1)

Pre-qualification of Third-Party Material Inspection Firms

Sr. No.	DESCRIPTION	REMARKS/COMMENTS
1	Registered name of the Company/AOP/firm in Pakistan	
2	Registered Office Address Registered sub-offices addresses (if any)	
3	Fax Number	
4	Phone No.	
5	E-mail Address	
6	Corporate Structure	
7	Year & Place of establishment of Company	
8	Contact Person /Representative Name and his Designation, CNIC, Contact No. & Email address	
9	NTN No.	
10	GST/PST No.	
11	Professional Tax certificate	
12	PEC Registration No.	
13	ISO/IEC 17020 or ISO 9001:2015 certificate or equivalent	
14	Article of Memorandum or Association/Partnership deed/JV agreement	
15	Undertaking of Non-blacklisting	
16	Social Security certificate	
17	EOBI certificate	
18	Bank statements & Bank certificates confirming turnover of last 03 years	
19	List of Organizations with whom you are already enlisted in Pakistan	

I _____ on behalf of _____ declare that the above facts and figures are correct to the best of my knowledge and I understand any misstatement shall state away lead to rejection of this proposal.

ANNEX-E

PREQUALIFICATION OF 3RD PARTY MATERIAL INSPECTION FIRM(S)

TENDER ENQUIRY # GM (QA)-PQTPIF-04

UNDERTAKING FOR BLACKLISTING/CROSS DEBARMENT

IT IS CERTIFIED & CONFIRMED THAT WE M/S ---------- ARE NOT/ HAVE NOT BEEN BLACKLISTED / CROSS DEBARRED BY ANY PUBLIC PROCUREMENT AGENCY, AND BY FOREIGN COUNTRY, INTERNATIONAL ORGANIZATION OR OTHER FOREIGN INSTITUTION.

IT IS FURTHER CERTIFIED THAT WE M/S ---------- DO NOT INVOLVE/ HAVE NOT BEEN INVOLVED IN CORRUPT & FRAUDULENT PRACTICE(S), AND WE HAVE NOT SUBMITTED ANY FALSE, WRONG, MISLEADING FACTS, DOCUMENTS & INFORMATION IN OUR BID/ PROPOSAL AGAINST THIS TENDER ENQUIRY # GM (QA)-PQTPIF-03

Name of Firm:---

Address:-----

E-mail: -----

contact #:-------

Official sign/stamp:----

ANNEX-F

PRE-QUALIFICATION OF 3RD PARTY MATERIAL INSPECTION FIRM(S)
TENDER ENQUIRY # GM (QA)-PQTPIF-04

Bid Securing Declaration

To: ***Sui Northern Gas Pipelines Limited***

We, the undersigned, declare that:

We understand that, according to your conditions, Bids must be supported by a Bid Securing Declaration.

We accept that we will be blacklisted and henceforth cross debarred for participating in respective category of public procurement proceedings for a period of maximum six months, if fail to abide with a bid securing declaration, however without indulging in corrupt and fraudulent practices, if we are in breach of our obligation(s) under the Bid conditions, because we:

(a) have withdrawn or modified our bid during the period of Bid Validity specified in the tender documents;

(b) Disagreement to arithmetical correction made to the Bid price; or

(c) having been notified of the acceptance of our Bid by SNGPL during the period of Bid Validity, (i) failure to sign the contract if required by SNGPL to do so or (ii) fail or refuse to furnish the Performance Security or to comply with any other condition precedent to signing the contract specified in the Bidding Documents.

Signed by Authorized person of the Applicant:

Name of Authorized person of the Applicant:

Dated on _____ day of _____, _____ *[insert **date of signing**]*
Corporate Seal (where appropriate)

ANNEX-G

PRE-QUALIFICATION OF 3RD PARTY MATERIAL INSPECTION FIRM(S)

TENDER ENQUIRY # GM (QA)-PQTPIF-04

CERTIFICATE OF FULL DISCLOSURE AND NON-COLLUSION

We, _____, a company/firm registered under the laws of Pakistan and having registered office at _____ hereby declare, confirm and as follows:

1. We have neither offered, given, received or solicited anything of value to influence the actions of any and all parties involved in the procurement process nor misrepresented or concealed any facts in order to influence the procurement process or accomplish the award of contract; nor have we been part of any corrupt or collusive practices prior to or after bid submission which might restrict, reduce or prevent free and open competition, and fair and transparent award of contract.

2. We neither had at the time of submitting the bid nor presently have any relationship, association or link with another bidder nor have we been involved in any arrangement or understanding that directly or indirectly restricted, reduced or prevented free and open competition or a fair and transparent award of contract; and we have made all the disclosures that may be necessary in this regard and nothing has been withheld or concealed from SNGPL.

3. At any stage of the procurement process or after award of the contract, SNGPL may, having evidence of any misrepresentation, inaccuracy, inconsistency or non-conformity in the disclosures, data or other information provided by us, withdraw the letter of award or terminate the contract at our sole cost and expense, and without any liability on the part of SNGPL.

4. This certificate shall form integral part of the contract documents and we shall remain bound by it at all material times.

(DEPONENT)

Verification:
Verified on oath that the contents of this Certificate are true to the best of our understanding, knowledge and belief and nothing has been concealed or misstated herein above.

(DEPONENT)

Dated: the _____

11.2 Required Services and Scope of Work

The empanelled firms shall also comply with the provisions regarding mandatory participation in subsequent Call-Off Procurements and removal from the Framework Panel, as detailed in Annexure-H / Special Conditions of the Framework Agreement.

PUBLIC PROCUREMENT REGULATORY AUTHORITY (PPRA) EPADS

Contractor's Representative and Key Personnel Schedule

Bidders should provide the names and details of the suitably qualified Contractor's Representative and Key Personnel to perform the Contract. The data on their experience should be supplied using the Form PER-2 below for each candidate.

Contractor' Representative and Key Personnel

1.	**Title of position:**	
	Name of candidate:	
	Duration of appointment:	[*insert the whole period (start and end dates) for which this position will be engaged*]
	Time commitment: for this position:	[*insert the number of days/week/months/ that has been scheduled for this position*]
	Expected time schedule for this position:	[*insert the expected time schedule for this position (e.g. attach high level Gantt chart*]
2.	**Title of position:**	
	Name of candidate:	
	Duration of appointment:	[*insert the whole period (start and end dates) for which this position will be engaged*]
	Time commitment: for this position:	[*insert the number of days/week/months/ that has been scheduled for this position*]
	Expected time schedule for this position:	[*insert the expected time schedule for this position (e.g. attach high level Gantt chart*]
3.	**Title of position:**	
	Name of candidate:	
	Duration of appointment:	[*insert the whole period (start and end dates) for which this position will be engaged*]
	Time commitment: for this position:	[*insert the number of days/week/months/ that has been scheduled for this position*]
	Expected time schedule for this position:	[*insert the expected time schedule for this position (e.g. attach high level Gantt chart*]
4.	**Title of position:**	
	Name of candidate:	
	Duration of appointment:	[*insert the whole period (start and end dates) for which this position will be engaged*]

	Time commitment: for this position:	[*insert the number of days/week/months/ that has been scheduled for this position*]
	Expected time schedule for this position:	[*insert the expected time schedule for this position (e.g. attach high level Gantt chart*]
5.	**Title of position:**	
	Name of candidate	
	Duration of appointment:	[*insert the whole period (start and end dates) for which this position will be engaged*]
	Time commitment: for this position:	[*insert the number of days/week/months/ that has been scheduled for this position*]
	Expected time schedule for this position:	[*insert the expected time schedule for this position (e.g. attach high level Gantt chart*]
6.	**Title of position:** *[insert title]*	
	Name of candidate	
	Duration of appointment:	[*insert the whole period (start and end dates) for which this position will be engaged*]
	Time commitment: for this position:	[*insert the number of days/week/months/ that has been scheduled for this position*]
	Expected time schedule for this position:	[*insert the expected time schedule for this position (e.g. attach high level Gantt chart*]

PUBLIC PROCUREMENT REGULATORY AUTHORITY (PPRA) EPADS

Form PER-2:
Resume and Declaration
Contractor's Representative and Key Personnel

Name of Bidder

Position [#*1*]: [*title of position from Form PER-1*]		
Personnel information	**Name:**	**Date of birth:**
	Address:	**E-mail:**
	Professional qualifications:	
	Academic qualifications:	
	Language proficiency:*[language and levels of speaking, reading and writing skills]*	
details		
	Address of Employer:	
	Telephone:	**Contact (manager / personnel officer):**
	Fax:	
	Job title:	**Years with present Employer:**

Summarize professional experience in reverse chronological order. Indicate particular technical and managerial experience relevant to the project.

Project	**Role**	**Duration of involvement**	**Relevant experience**
[main project details]	*[role and responsibilities on the project]*	*[time in role]*	*[describe the experience relevant to this position]*

Declaration

I, the undersigned *[insert either "Contractor's Representative" or "Key Personnel" as applicable]* , certify that to the best of my knowledge and belief, the information contained in this Form PER-2 correctly describes myself, my qualifications and my experience.

I confirm that I am available as certified in the following table and throughout the expected time schedule for this position as provided in the Bid:

Commitment	**Details**
Commitment to duration of contract:	*[insert period (start and end dates) for which this Contractor's Representative orKey Personnel is available to work on this contract]*
Time commitment:	*[insert period (start and end dates) for which this Contractor's Representative orKey Personnel is available to work on this contract]*

I understand that any misrepresentation or omission in this Form may:

(a) be taken into consideration during Bid evaluation;

(b) result in my disqualification from participating in the Bid;

(c) result in my dismissal from the contract.

Name of Contractor's Representative or **Key Personnel: [*insert name*]**

Signature: _____

Date: (day month year): _____

Countersignature of authorized representative of the Bidder:

Signature: _____

Date: (day/month/year): _____

Past Experience / Contracts

Contracts over *[insert amount]* during the last three years:				
Procuring Agency	Value	Year	Goods/Services Supplied	Country of Destination

Historical Contract Non-Performance, and Pending Litigation and Litigation History

[The following table shall be filled in for the Applicant and for each member of a Joint Venture]

Applicant's Name: *[insert full name]*
Date: *[insert day, month, year]*
Joint Venture Member Name: *[insert full name]*
IFP No. and title: *[insert IFP number and title]*
Page *[insert page number]* of *[insert total number]* pages

☐ Not debarred due to deviation from commitment of Bid Securing Declaration-☐ Not debarred due to non-performance			
Year	**Non-performed portion of contract**	**Contract Identification**	**Total Contract Amount (current value, currency, exchange rate and PKR equivalent)**
[insert year]	*[insert amount and percentage]*	Contract Identification: *[indicate complete contract name/ number, and any other identification]* Name of Procuring Agency: *[insert full name]* Address of Procuring Agency: *[insert street/city/country]* Reason(s) for nonperformance: *[indicate main reason(s)]*	*[insert amount]*
Pending Litigation, in accordance with Section III, Qualification Criteria and Requirements			
☐ Pending litigation in accordance with Section III, Qualification Criteria and Requirements, Sub-Factor 2.3 as indicated below.			

Year of dispute	**Amount in dispute (currency)**	**Contract Identification**	**Total Contract Amount (currency), ~~US$~~ PKR Equivalent (exchange rate)**

[insert year]	*[insert amount]*	Contract Identification: [indicate complete contract name, number, and any other identification] Name of Procuring Agency: *[insert full name]* Address of Procuring Agency: *[insert street/city/country]* Matter in dispute: *[indicate main issues in dispute]* Party who initiated the dispute: *[indicate "Procuring Agency" or "Supplier"]* Status of dispute: *[Indicate if it is being treated by the Adjudicator, under Arbitration or being dealt with by the Judiciary]*	*[insert amount]*

☐ No consistent history of court/arbitral award decisions in accordance with Section III, Qualification Criteria and Requirements, Sub-Factor 2.4.

☐ Consistent history of court/arbitral award decisions in accordance with Section III, Qualification Criteria and Requirements, Sub-Factor 2.4 as indicated below.

Year of award	**Outcome as percentage of Net Worth**	**Contract Identification**	**Total Contract Amount (currency), PKR Equivalent (exchange rate)**
[insert year]	*[insert percentage]*	Contract Identification: [indicate complete contract name, number, and any other identification] Name of Procuring Agency: *[insert full name]* Address of Procuring Agency: *[insert street/city/country]* Matter in dispute: *[indicate main issues in dispute]* Party who initiated the dispute: *[indicate "Procuring Agency" or "Supplier"]* Court/ arbitral award decision: *[Indicate if the award decision was against the Applicant or any member of a joint venture.]y]*	*[insert amount]*

Current Contract Commitments / Works in Progress

Bidders and each member to a JV should provide information on their current commitments on all contracts that have been awarded, or for which a letter of intent or acceptance has been received, or for contracts approaching completion, but for which an unqualified, full completion certificate has yet to be issued.

Current Contract Commitments					
No.	Name of Contract	**Employer's Contact Address, Tel, Fax**	**Value of Outstanding Work [Current Eq. PKR]**	**Estimated Completion Date**	**Average Monthly Invoicing Over Last Six Months [Eq. PKR/month)]**
1					
2					
3					
4					
5					

Financial Situation and Performance

[The following table shall be filled in for the Applicant and for each member of a Joint Venture]

Applicant's Name: *[insert full name]*
Date: *[insert day, month, year]*
Joint Venture Member Name: *[insert full name]*
IFP No. and title: *[insert IFP number and title]*
Page *[insert page number]* of *[insert total number]* pages

1. Financial data

Type of Financial information in (currency)	**Historic information for previous** _*[insert number] years, [insert in words]* **(amount in currency, currency, exchange rate*, PKR equivalent)**				
	Year 1	Year 2	Year 3		
Statement of Financial Position (Information from Balance Sheet)					
Total Assets (TA)					
Total Liabilities (TL)					
Total Equity/Net Worth (NW)					
Current Assets (CA)					
Current Liabilities (CL)					
Working Capital (WC)					
Information from Income Statement					
Total Revenue (TR)					
Profits Before Taxes (PBT)					
Cash Flow Information					
Cash Flow from Operating Activities					

* Refer ITA 14 for the exchange rate

3. Financial documents

The Applicant and in case of JV, members of JV shall provide copies of financial statements for *[number]* years pursuant Section III, Qualifications Criteria and Requirements. The financial statements shall:

(a) reflect the financial situation of the Applicant or in case of JV member, and not an affiliated entity (such as parent company or group member).

(b) be independently audited or certified in accordance with local legislation.

(c) be complete, including all notes to the financial statements.

(d) correspond to accounting periods already completed and audited.

☐ Attached are copies of financial statements[1] for the *[number]* years required above; and complying with the requirements.

[1] If the most recent set of financial statements is for a period earlier than 12 months from the date of Application, the reason for this should be justified.