Standard Bidding Document

SSGC/SC/PT/EPADS2/14442 (Civil Works Renovation Works of CP Stations (16 Nos.) & Guard Rooms (02 Nos.) and New Construction of Care Taker Room (02 nos.) at Different Locations In Hq-3, Hyderabad Section (As Per BOQ/Criteria) (Non-Consultancy Services)

National

Single Stage-Two Envelope

CORRIGENDUM # 2	CORR-P94024-002
Initiation Date	September 25, 2026

September 25, 2026

SSGC (PROCUREMENT DEPARTMENT),DCM
ST-4/B, Block 14, Sir Shah Suleman Road, Gulshan-e-Iqbal, Karachi, Pakistan
Phone: +92-322-821489, Email: MMTE@SSGC.COM.PK

Table of Contents

PROCUREMENT NOTICE 1

Instructions to Bidders 3

Bid Data Sheet 24

Bids Data Sheet (BDS) 25

Eligibility Criteria 29

Evaluation Criteria 30

Required Services 31

Related Services : 32

Services Specifications 33

Scope of Work 34

Price Schedule 35

General Conditions of Contract 37

Special Conditions of Contract 47

Bid Securing Declaration 52

Contract Form 54

Integrity Pact 57

Performance Guarantee Form 59

Annexure 62

SSGC/SC/PT/EPADS2/14442 63

Evaluation Criteria with forms attached at Annexure A 63

SSGC/SC/PT/EPADS2/14442 Extension-1 64

Procurement Forms 65

Additional Forms and Documents 68

PROCUREMENT NOTICE

PROCUREMENT OF NON-CONSULTANCY SERVICES

1. The **SSGC (PROCUREMENT DEPARTMENT)** has reserved Funds for the procurement planned for FY **2026-27**. The **SSGC (PROCUREMENT DEPARTMENT)** intends to apply part of the proceeds of this Fund to cover eligible payments under the contract for the "**SSGC/SC/PT/EPADS2/14442 (Civil Works Renovation Works of CP Stations (16 Nos.) & Guard Rooms (02 Nos.) and New Construction of Care Taker Room (02 nos.) at Different Locations In Hq-3, Hyderabad Section (As Per BOQ/Criteria)**" with the reference of **"P94024"**

2. The **SSGC (PROCUREMENT DEPARTMENT)** invites Bids through **EPADS v2.0** from eligible Bidders registered on **EPADS v2.0** for provision of Non-Consultancy Services.

3. **Single Stage-Two Envelope** Procedure of Principal Method of Procurement (i.e. Open Competitive Bidding) will be used by adopting **Least Cost Based Selection (LCBS)**Technique for the subject procurement, in line with the Public Procurement Rules, 2004 and any Regulations, and Instructions issued by the Authority (from time to time).

4. All Bids must be accompanied by a Bid Security described in Bid Security Section in Bidding Document in the form of **Pay Order, Call at Deposit, Bank Guarantee** or Bid Securing Declaration on the prescribed format described.

5. E-Bidding documents, containing detailed terms & conditions, specifications and requirements etc. are available on **e-Pak Acquisition and Disposal System (EPADS)** at **https://epads.gov.pk/opportunities/federal/procurements/94024**.

6. The e-bids, prepared in accordance with the instructions in the e-Bidding documents, must be submitted through **EPADS v2.0** on or before **Thursday, October 8, 2026 11:30 AM**. E-bids will be opened on the same day at **Thursday, October 8, 2026 12:00 PM**. Manual submission of Bids shall not

be entertained. Those vendors who have not yet registered on the new version of **EPADS v2.0,** may register themselves on **https://vendors.epads.gov.pk/**. A tutorial to explain the registration process is available at **https://www.youtube.com/watch?v=MNW6T38v7tc**

7. In terms of Rules 48 of Public Procurement Rules, 2004 Grievance Redressal Committee (GRC) is notified for the subject procurement and notification copy is available on the procuring agency's website and also available on **EPADS v2.0** as well as Authority's website at (**www.ppra.org.pk**).

SSGC (PROCUREMENT DEPARTMENT), DCM
ST-4/B, Block 14, Sir Shah Suleman Road, Gulshan-e-Iqbal, Karachi, Pakistan
+92-322-821489
MMTE@SSGC.COM.PK

Instructions to Bidders

A. Introduction

1. **Scope of Bids**

1.1. The Procuring Agency (PA), as indicated in the **Bids Data Sheet (BDS)** invites Bids through **EPADS v2.0** for the provision of Non-Consultancy Services for as specified in the BDS and **in Section Evaluation Criteria, Specifications & Schedule of Requirements**. The name, identification, and number of items/deliverables are provided in the **BDS**. **Single Stage-Two Envelope** procedure of the open competitive method shall be used. The successful Bidders will be expected to provide the services within the specified period and timeline(s) as stated in the **BDS**.

2. **Source of Funds**

2.1. Source of funds is referred in Clause-1 of Invitation for Bids.

3. **Fraudualent & Corrupt Practices**

3.1. As defined under Rule 2(1)(f) of the Public Procurement Rules, 2004.

4. **Eligible Bidders**

4.1. A bidder is eligible to participate in a procurement process if the bidder:

4.1.1. possesses or has access to the technical competence, financial resources, equipment and other physical facilities, personnel, managerial capability, experience and reputation necessary to complete the procurement contract;

4.1.2. has the legal capacity to enter into a procurement contract;

4.1.3. is not insolvent, in receivership, bankrupt or being wound up and its activities or affairs are not suspended or being administered under any Act, by a court or by a judicial officer;

4.1.4. is not the subject of legal proceedings for any of the matters mentioned in sub-rule (c);

4.1.5. has fulfilled or has made substantial arrangements satisfactory to the relevant authorities, to fulfil its obligations to pay taxes and social security (where applicable) other contributions of its employees; and

4.1.6. has not, or in the case of a company, its owners and beneficial owners, directors or officers have not, been convicted of a criminal offence related to:

4.1.6.1. its professional conduct; or

4.1.6.2. a bidder (or, in the case of a company, its key individuals such as owners, beneficial owners, directors, or officers) must not have engaged in any prohibited practice, such as fraud, corruption, collusion, or coercion, within the time period stated in the bidding documents, which can be up to three years before the start of the procurement process. Additionally, the bidder must not have been debarred (i.e., banned) from participating in public procurement processes in Pakistan or by any international organization or country. If they have, they are ineligible to participate in the current bidding.

4.2. The procuring agency may require a bidder participating in the procurement process to provide the prescribed documentary evidence or other information to satisfy itself that the bidder is qualified in accordance with the criteria in sub-clause (1).

4.3. A procuring agency shall set out in the bidding document all the criteria for qualification to be applied in accordance with sub-clause (1).

4.4. Except as permitted under the Ordinance, Rules and Regulations, the procuring agency shall not establish a criterion for eligibility of a bidder that:

4.4.1. discriminates against or among a bidder or against categories of bidders; or

4.4.2. is not required for the performance of the procurement contract; or

4.4.3. is not related to the avoidance or management of legal, reputational or economic risk to the procuring agency unless it is in the national interest to do so, and the criteria is set out in the bidding documents.

4.5. A procuring agency shall assess the eligibility of a bidder for participation in the procurement process against the criteria for qualification under sub-clause (1).

4.6. In the case of a joint venture, consortium, or association, all members shall be jointly and severely liable for the execution of the contract in accordance with the terms and conditions of the contract. The joint venture, consortium, or association shall nominate a lead member as nominated in the BDS,

4.7. who shall have the Authority to conduct all business for and on behalf of any and all the members of Joint venture, consortium, or association during the bidding process, and in case of award of contract, during the execution of the contract.

4.8. The appointment of the lead Member in the joint venture, consortium, or association shall be confirmed by submission of valid power of Attorney to the procuring agency.

4.9. Subject to the limits specified in the BDS, the procuring agency may allow bidders to participate in the form of a Joint Venture (JV). However, each party in the JV must individually meet the eligibility criteria specified in the BDS

4.10. No Bidder can be a sub-contractor while submitting a Bids individually or as a member of a joint venture in the same Bidding process.

5. **Qualification of the Bidder**

5.1. All Bidders shall provide in Section VI, Bid Forms, a preliminary description of the proposed work method and schedule, including drawings and charts, as necessary.

B. Bidding Documents

6. **Contents of Standard Bidding Document**

6.1. The Services required, bidding procedure, and terms and conditions of the contract are prescribed in the bidding document. In addition to the Invitation for Bids, the bidding document which should be read in conjunction with any addendum issued by the Procuring Agency include:

Section I -Invitation to Bid
Section II Instructions to Bidders (ITB)
Section III Bid Data Sheet (BDS)
Section IV Eligible Countries
Section V Evaluation Criteria, Specifications, Schedule of Requirements, and Technical Specifications.
Section VI Bidding Forms
Section VII Fraudaulent & Corrupt Practices
Section VIII – Material & Non-material deviation
Section IX General Conditions of Contract (GCC)
Section X Special Conditions of Contract (SCC)
Section XI Contract Forms

6.2. The Bidder is expected to examine all instructions, requirements, forms, terms and specifications in the bidding documents. Failure to furnish all the information required in the bidding document will be at the Service provider’s risk and may result in the rejection of his bids.

7. **Clarifications**

7.1. Clarifications of the bidding documents may be requested in writing through EPADS v2.0 by any bidder up to three days prior to the deadline for the submission of bids.

The procuring agency shall respond promptly and in writing to any request by a bidder for clarification of the bidding documents and, in any event, no later than two days prior to the deadline for the submission of bids or proposals.

Responses to requests for clarification shall be communicated simultaneously and in writing to all bidders participating in the procurement proceedings.

No bidder shall be allowed to alter or modify his bid after the bids have been opened however, the procuring agency may seek and accept clarification to the bid that do not change the substance of the bid, through EPADS v2.0.

7.2. Procuring Agency's response will be uploaded on the EPADS v2.0, including a description of the inquiry.

7.3. Should the Procuring Agency deem it necessary to amend the bidding document as a result of a clarification, it shall do so following the procedure under **ITB 1.1.**

7.4. If indicated **in the BDS**, the bidder's designated representative is invited at the bidder's cost to attend a pre-bid meeting at the place, date and time mentioned **in the BDS**. During this pre-bid meeting, prospective bidder(s) may request clarification(s) regarding the schedule of requirements, the Evaluation Criteria or any other aspects of the bidding document.

7.5. Minutes of the pre-bid meeting, if applicable, including the text of the questions asked by bidders, and the responses given, together with any responses prepared after the meeting will be uploaded on EPADS v2.0. Any modification to the bidding document that may become necessary as a result of the pre-bid meeting shall be made by the Procuring Agency exclusively through the use of an Addendum.

7.6. To assist in the examination, evaluation and comparison of Bids of the Bidders, the Procuring Agency may, ask any Bidder for a clarification of its bid including breakdown of prices, through EPADS v2.0. Any clarification submitted by a bidder that is not in response to a request by the Procuring Agency shall not be considered.
No change in the prices or substance of the bid shall be sought, offered, or permitted.
The alteration or modification in the bid which in any way affect the following parameters will be considered as a change in the substance of a

bid:

7.6.1. evaluation & qualification criteria;

7.6.2. required scope of work or specifications;

7.6.3. all securities requirements;

7.6.4. tax requirements;

7.6.5. terms and conditions of bidding documents; and

7.6.6. change in the ranking of the bidders.

From the time of bid(s) opening to the time of contract award, if any bidder wishes to contact the procuring agency on any matter related to the bid, it should do so in writing or through electronic form that provides record of the content of communication.

8. **Amendment of Bidding documents**

8.1. Before the deadline for submission of bids, the procuring agency for any reason, whether at its own initiative or in response to a clarification requested by a prospective bidder or pre-bid meeting may modify the bidding documents by issuing addendum.

8.2. Any addendum issued including the notice of any extension of the deadline shall be part of the bidding document and shall be uploaded on EPADS v2.0 as well as Authority's website. The procuring agency shall promptly publish the addendum at the procuring agency's website indicated in the **BDS**:

Provided that the bidder who had either already submitted his bid, shall have the right to withdraw his already submitted bid and submit the revised bid, prior to the original or extended bid submission deadline.

8.3. To give prospective bidders reasonable time in which to take an addendum/corrigendum into account in preparing their bids, the Procuring Agency may, at its discretion, extend the deadline for the submission of bids:

Provided that the Procuring Agency shall extend the deadline for submission of bids, if such an addendum is issued within last three (03) days of the bid submission deadline.

C. Preparation of Bids

9. Documents Constituting the Bids

9.1. The bids prepared by the bidders shall constitute the following components: -

9.1.1. Forms of bid and Bid Prices completed in accordance with ITB BDS, GCC and SCC;

9.1.2. Documentary evidence established in accordance with BDS that services to be provided by the bidder are eligible services, and conform to the bidding documents;

9.1.3. Documentary evidence established in accordance with BDS that the bidder is eligible and/or qualified for the subject bidding process;

9.1.4. Documentary evidence established, that the bidder has been authorized to provide the services;

9.1.5. Bid security or Bids Securing Declaration furnished in accordance with BDS; and

9.1.6. Any other document required in the BDS.

10. **Documents Establishing Eligibility of the Services and Conformity to bidding documents**

10.1. To establish the conformity of the Non-Consulting Services to the Bidding document, the bidder shall furnish as part of its bid the documentary evidence that services provided conform to the requirements.

10.2. Standards for the provision of the Non-Consulting Services are intended to be descriptive only and not restrictive.

11. **Documents Establishing Eligibility and Qualification of the Bidder**

11.1. Pursuant to BDS, the bidder shall furnish, as part of itsbid, all those documents establishing the bidder's eligibility to participate in the bidding process and/or its qualification to perform the contract if its bid is accepted.

11.2. The documentary evidence of the bidder's eligibility to bids shall establish to the satisfaction of the procuring agency that the bidder, at the time of submission of its bid, is from an eligible country as defined in Section-IV titled as "Eligible Countries".

11.3. The documentary evidence of the bidder's qualifications to perform the contract if its bid is accepted shall establish to the satisfaction of procuring agency that:

11.3.1. the bidder has the financial, technical, and supply/production capability necessary to perform the Contract, meets the qualification criteria specified in BDS.

11.3.2. that the bidder meets the qualification criteria listed in the Bids Data Sheet.

12. **Form of Bid**

12.1. **The bidder shall fill the Form of Bid furnished in the bidding documents. The Bid Forms must be completed without any alterations to its format and no substitute shall be accepted.**

13. **Bids Prices**

13.1. The Bids Prices quoted by the bidder in the Forms of Bid and in the price schedule shall conform to the requirements specified or exclusively mentioned hereafter in the bidding document.

13.2. All items in the Schedule of Requirements must be listed and priced separately in the Price Schedules. If a Price Schedule shows items listed but not priced and neither explicitly mentioned, their prices shall be construed to be included in the prices of other items.

13.3. The Bid price to be quoted in the Forms of Bid shall be the total price of the bid, excluding any discounts offered.

13.4. The bidder shall indicate on the appropriate Price Schedule, the unit prices (where applicable) and total bid price of the services, it proposes to provide under the contract.

13.5. Prices quoted by the bidder shall be fixed during the currency of the contract and not subject to variation on any account. A bid submitted with an adjustable price will be treated as non-responsive and shall be rejected, unless otherwise price adjustment is permissible under Conditions of the Contract. (May be reviewed)

14. **Price Adjustment**

14.1. Price adjustment shall not be applicable.

14.2. Procuring agency may increase the remuneration of the human resources involved in non-consultancy services on annual basis as per agreement.

14.3. **Procuring agency shall incorporate the provisions to allow wage rate in compliance with Federal Government's minimum wage notification, subject to the applicability in that case.**

15. **Bids Currencies**

15.1. Prices shall be quoted in Pakistani Rupees unless otherwise specified in the BDS.

16. **Bid Validity Period**

16.1. Bid(s) shall remain valid for the period specified in the BDS after the bid submission deadline prescribed by the Procuring Agency. A Bid valid for a shorter period shall be rejected by the Procuring Agency as non-responsive. The period of bid validity will be determined from the complementary bid securing instrument i.e. the expiry period of bid security or bid securing declaration as the case may be.

17. **Bid Security or Bid Securing Declaration**

17.1. Unless otherwise specified in the BDS, the bidder shall furnish as part of its bid, in the amount and currency specified in the BDS or Bid Securing Declaration on the format provided in Section VI (Bid Forms) The scanned copy of the Bids Security shall be uploaded in the EPADS v2.0 while submitting bid, whereas the original forms of Bid Security shall be submitted to the procuring agency before the bid submission deadline. The bidder who failed to submit the original bid security before the submission deadline shall be disqualified straightaway.

17.2. The Bid Security or Bid Securing Declaration is required to protect the Procuring Agency against the risk of Bidder's conduct which would warrant the security's forfeiture.

17.3. The Bid Security shall be payable promptly upon written demand by the Procuring Agency in case any of the conditions listed in BDS, GCC and SCC are invoked.

17.4. Unsuccessful Bidders' Bid Security will be discharged or returned as promptly as possible after the award of contract, however in no case later than thirty (30) days after the expiration of the period of Bid Validity prescribed by the Procuring Agency. The Procuring Agency shall make no claim to the amount of the Bid Security, and shall promptly return the Bid Security document, whichever of the following that occurs earliest:

17.4.1. the expiry of the Bid Security;

17.4.2. the entry into force of a procurement contract and the provision of a Performance Guarantee, for the performance of the contract if such a guarantee, is required by the bidding document;

17.4.3. the rejection by the Procuring Agency of all Bids;

17.4.4. the withdrawal of the Bid prior to the deadline for the submission of bids, unless the bidding document stipulate that no such withdrawal is permitted.

17.5. The Bid Security may be forfeited or the Bid Securing Declaration executed:

17.5.1. if a bidder:

17.5.1.1. withdraws its bid during the period of bid validity as specified by the Procuring Agency, and referred by the bidder in the Forms of Bid, except as provided for in the ITBs; or

17.5.1.2. does not accept the correction of errors, or

17.5.2. in the case of a successful bidder fails:

17.5.2.1. **to sign the contract in accordance with SCC; or**

17.5.2.2. **to furnish Performance Guarantee in accordance with BDS and SCC.**

17.6. **The bid security shall be valid for a period specified in BDS. Bids with shorter bid security validity period shall be rejected straight away.**

18. **Alternative Bids by Bidders**

18.1. Alternatives will not be considered, unless specifically allowed for in the BDS.

18.2. When alternative times for completion are explicitly invited, a statement to that effect will be included in the BDS and the method of evaluating different time schedules will be described in Evaluation and Qualification Criteria.

19. **Withdrawal, Substitution, and Modification of Bids**

19.1. Before Bids submission deadline, any bidder may withdraw, substitute, or modify his bid after it has been submitted.

20. **Format and Signing of Bids**

20.1. The bidder shall prepare and submit his bid with due diligence after carefully reading all the terms and conditions before submission through

EPADS v2.0.

20.2. Any interlineations, erasures, or overwriting shall be valid only if they are signed by the person(s) signing the forms of bid.

D. Submission of Bids

21. **Submission of Bids through EPADS v2.0 before Dead deadline**

21.1. The Technical and Financial Bids as the case may be, shall be submitted in the due portion of the EPADS v2.0, before bid submission deadline. The bid submission option shall be automatically disabled once the deadline is over.

21.2. The Procuring Agency may, under exceptional circumstances and at its discretion, extend the deadline for the submission of bids by amending the Bidding Documents. In such a case, all rights and obligations of the Procuring Agency and the Bidders that were previously subject to the original deadline shall thereafter be subject to the revised deadline.

E. Opening and Evaluation of Bids

22. **Opening & Evaluation of Bids by the Procurement Cell/Evaluation Committee**

22.1. The Procuring Agencies to constitute odd number Bid Evaluation Committee for the purpose of bid opening and evaluation of all procurements. As per Rules 29 & 30 of Public Procurement Rules, 2004,
The Procuring Agencyis required to establish a Procurement Cell/Evaluation Committee which shall Evaluate the Bids inaccordance with the evaluation criteria, terms and conditions given in the bidding documents.

23. **Opening of Bids**

23.1. The Bid Evaluation Committee of the Procuring Agency will open all bids through EPADS, in the presence of bidders' or their representatives who

choose to attend, and other parties with a legitimate interest in the bid proceedings at the place, on the date and at the time, specified in the **BDS**. The Bidders' representatives present shall sign attendance sheet as proof of their attendance.

23.2. The bids shall be opened one at a time, and the following read out and recorded: (a) the name of the bidder; (c) the presence of a bid security, if required; and (d) any other details as the procuring agency may consider appropriate.

23.3. No bid will be rejected at the time of bid opening except for bids whose bid security has not been provided to the procuring agency before submission deadline**.**

23.4. The procuring agency shall prepare minutes of the bid opening. The record of the bid opening shall include, as a minimum: the name of the bidder and the bid price, if applicable.

24. **Confidentiality**

24.1. Information relating to the examination, clarification, evaluation and comparison of bids and recommendation of contract award shall not be disclosed to bidders or any other person(s) not officially concerned with such process, until the time of the announcement of the respective evaluation report.

24.2. Any effort by a bidder to influence the procuring agency processing of bids or award decision may result in the rejection of his bid.

25. **Preliminary Examination of Bids**

25.1. Prior to the detailed evaluation of bids, the procuring agency will determine whether each bid:

25.1.1. meets the eligibility criteria defined in **BDS**;

25.1.2. has been prepared as per the format and contents defined by the procuring agency in the bidding document;

25.1.3. is accompanied by the required securities; and

25.1.4. is substantially responsive to the requirements of the bidding document.

25.2. The procuring agency will confirm that the documents and information specified under **BDS, GCC and SCC** have been provided in the bids. If any of these documents or information is missing, or is not provided in accordance with the Instructions to Bidders, the bids shall be rejected.

25.3. If a bid is not substantially responsive, it will be rejected by the procuring agency and may not subsequently be evaluated for complete technical responsiveness.

26. **Examination of Terms and Conditions, Technical Evaluation**

26.1. The procuring agency shall evaluate the technical aspects of the bids submitted in accordance with **BDS,** to confirm that all requirements specified in **Evaluation Criteria, Technical Specifications and Schedule of Requirements**, prescribed inthe bidding document have been met without material deviation or reservation.

26.2. If after the examination of the terms and conditions and the technical evaluation, the procuring agency determines that the bid is not substantially responsive in accordance with BDS**,** it shall reject the bids.

27. **Correction of Errors**

27.1. Bids determined to be substantially responsive will be checked for any arithmetic errors. Errors will be corrected as follows: -

27.1.1. if there is a discrepancy between unit prices and the total price that is obtained by multiplying the unit price and quantity, the unit price shall prevail, and the total price shall be corrected, unless in the opinion of the procuring agency there is an obvious misplacement of the decimal point in the unit price, in which the total price as quoted shall govern and the unit price shall be corrected;

27.1.2. if there is an error in a total corresponding to the addition or subtraction of sub-totals, the sub-totals shall prevail and the total shall be corrected; and

27.1.3. where there is a discrepancy between the amounts in figures and in words, the amount in words will govern.

27.1.4. Where there is discrepancy between grand total of price schedule and amount mentioned on the Forms of bid, the amount referred in Price Schedule shall be treated as correct subject to elimination of other errors.

27.2. The amount stated in the bid will be adjusted by the procuring agency in accordance with the above procedure for the correction of errors and, with the concurrence of the bidder that shall be considered as binding upon the bidder. If the Bidder does not accept the corrected amount, his bid will then be rejected, and the Bid Security may be forfeited or the Bid Securing Declaration may be executed.

28. **Conversion to Single Currency**

28.1. As per Rule 30 of Public Procurement Rules, 2004.

29. **Evaluation of Bids**

29.1. The procuring agency shall evaluate bids in accordance with Rule 30 of Public Procurement Rules, 2004 and compare only those bids determined to be substantially responsive.

29.2. In evaluating the Technical Bids of each Bidder, the Procuring Agency shall apply the evaluation criteria and methodologies specified in the Bid Data Sheet (BDS) and in accordance with the Statement of Requirements and Technical Specifications. No other evaluation criteria or methodologies shall be permitted.

29.3. In case of tie of bids, the bidders shall be provided an opportunity to offer their best and final monetary offer through EPADS. However, in no case the rates shall be higher than the original financial bids.

29.4. The Procuring agency evaluation of a bid will take into account:

29.4.1. the bid price, excluding provisional sums and the provision, if any, for contingencies in the summary bill of quantities, but including day work items, where priced competitively;

29.4.2. price adjustment for correction of arithmetic errors in accordance with **ITB 6;**

29.5. converting the amount resulting from applying (a) and (b) above, if relevant, to a single currency in accordance with **ITB 7**;

29.6. The estimated effect of the price adjustment provisions of the Conditions of Contract, applied over the period of execution of the Contract, shall not be taken into account in bid evaluation.

29.7. If these bidding documents allow bidders to quote separate prices for different lots, and the award to a successful bidder of multiple lots, the methodology of evaluation to determine the lowest evaluated lot combinations in the Form of Bid, is specified in the **BDS.**

30. **Determination of Most Advantageous Bids**

30.1. Selection technique will be adopted for determining the Successful Bid in accordance with the criteria referred in the **BDS** or prescribed in the separate section titled as Evaluation Criteria.

31. **Abnormally Low Financial Bids**

31.1. Procuring agency may reject a bid if it has determined that the price, in combination with other constituent elements of the bid, is abnormally low in relation to the subject matter of the procurement, such that it raises material concerns on the part of the procuring agency, as to the ability of the bidder to perform the procurement contract satisfactorily for the offered price.

A procuring agency shall not reject a bid as abnormally low under sub-clause (1) above unless the procuring agency –

31.1.1. requested in writing through EPADS from the bidder a written clarification of his bid, including a detailed price analysis of his bid price in relation to the subject matter of the procurement contract, scope, methodology, schedule, allocation of risks and responsibilities and any other requirements of the bidding document; and

31.1.2. having taken account, the information provided by the bidder in response to a request under paragraph (a) and the information included in the bid, the procuring agency determines that the bidder has failed to demonstrate its ability to perform the procurement contract satisfactorily for the offered price.

The procuring agency shall promptly communicate to the bidder concerned its decision to reject the bid, including the reasons for the decision.

32. **Rejection of Bids**

32.1. As per Rule 33 of the Public Procurement Rules, 2004

33. **Single Responsive Bid**

33.1. The procuring agency may consider single responsive bid subject to underlying conditions of Rule 38(b) of the Public Procurement Rules, 2004.

34. **Arbitration**

34.1. As per Rule 49 of Public Procurement Rules, 2004.

F. Award of Contract

43. **Criteria of Award**

43.1. The procuring agency will award the Contract to the bidder whose bid has been determined to be substantially responsive to the bidding document and who has been declared as most advantageous Bid.

44. **Procuring Agency's Right to reject All Bids**

44.1. The procuring agency reserves the right to reject all the Bids and to annul the procurement process at any time prior to acceptance of the bid(s), without thereby incurring any liability to the affected bidder(s).

44.2. Notice of the rejection of all bids shall be given promptly to all bidders that have submitted the bids. The procuring agency shall upon request communicate to any bidder the grounds for the rejection of his bid, but is not required to justify those grounds.

45. **Notification of Award**

45.1. Prior to the award of contract, the procuring agency shall issue a Final Evaluation Report giving justification for acceptance or rejection of the bids.

45.2. Bidder whose bid has been accepted, will be notified for the award by the Procuring Agency prior to expiration of the Bid Validity period through EPADS. The Letter of Acceptance will state the sum that the procuring agency will pay the successful bidder in consideration for the execution of the scope of works as prescribed by the Contract (hereinafter and in the Contract called the "Contract Price).

45.3. The notification of award will constitute the formation of the Contract, subject to the condition that bidder furnish the Performance Guarantee and signing of the contract.

46. **Signing of Contract**

46.1. Promptly after notification of award, Procuring Agency shall send the successful bidder the draft agreement, incorporating all terms and conditions as agreed by the parties to the contract. The successful bidder and the procuring agency shall sign the contract.

47. **Performance Guarantee**

47.1. After the receipt of the Letter of Acceptance, the successful bidder, within the specified time, shall deliver to the Procuring Agency a Performance Guarantee in the amount and in the form stipulated in the **BDS**

and SCC, denominated in the type and proportions of currencies in the Letter of Acceptance and in accordance with the Conditions of Contract.

47.2. Failure of the successful bidder to comply with the requirement of **BDS, SCC and GCC** shall constitute sufficient grounds for the annulment of the award and forfeiture of the bid security, in which event the procuring agency may make the award to the next ranked bidder or call for new bids.

48. **Corrupt & Fraudulent Practices**

48.1. Procuring Agencies (including beneficiaries of Government funded projects and procurement) as well as Bidders/Contractors under Government financed contracts, observe the highest standard of ethics during the procurement and execution of such contracts, and will avoid to engage in any corrupt and fraudulent practices.

G. Grievance Redressal & Complaint Review Mechanism

53. **Constitution of Grievance Redressal**

53.1. Procuring agency shall constitute a Grievance Redressal Committee (GRC) comprising of an odd number of persons with proper power and authorization to address the complaint. The GRC shall not have any of the members of Procurement Evaluation Committee.

54. **GRC Procedure**

54.1. Any aggrieved party or bidder as the case may be, may file grievance in accordance with Rule 48 of the Public Procurement Rules, 2004 and Redressal of Grievance Regulations, 2022

H. Blacklisting/ Debarment

55. **Procedure for Blacklisting/Debarment**

55.1. The procuring agency may initiate blacklisting proceedings against contractor/supplier in accordance with Rule-19 of the Public Procurement

Rules, 2004 , Mechanism for Blacklisting, Debarment Regulations, 2024 and Regulation on “procedure for filling and disposal of review petition under rule-19(3) of the Public Procurement Rules, 2004.

PUBLIC PROCUREMENT REGULATORY AUTHORITY (PPRA) EPADS

Bid Data Sheet

Bids Data Sheet (BDS)

The following specific data for the procurement of Non-Consultancy Services to be procured shall complement, supplement, or amend the provisions in the Instructions to Bidders (ITB). Whenever there is a conflict, the provisions herein shall prevail over those in ITB.

BDS Clause Number
ITB Number

Amendments of, and Supplements to, Clauses in the Instruction to Bidders

A. Introduction

BDS Clause Number 1

Name of Procuring Agency: **SSGC (PROCUREMENT DEPARTMENT)**

The subject of procurement is: **SSGC/SC/PT/EPADS2/14442 (Civil Works Renovation Works of CP Stations (16 Nos.) & Guard Rooms (02 Nos.) and New Construction of Care Taker Room (02 nos.) at Different Locations In Hq-3, Hyderabad Section (As Per BOQ/Criteria)**

Expected commencement date: **Wednesday, April 21, 2027**

BDS Clause Number 2

Financial year for the operations of the Procuring Agency: **2026-27**

Name and identification number of the Contract: **P94024**

BDS Clause Number 3

JV/Consortium or Association Allowed: **No**
Number of JV/Consortium Members: **Nil**

B. Bidding Documents

BDS Clause Number 4

The Bidders may seek clarifications through **EPADS v2.0**: Clarification Date: Thursday, September 24, 2026

BDS Clause Number 5

Any addendum, in case issued, shall be published on **SSGC (PROCUREMENT DEPARTMENT)** website and on **EPADS v2.0**.

BDS Clause Number 6

List of documents required along with the bid: No

BDS Clause Number 7

The qualification criteria to establish the supply / production capability of the bidder.

see Eligibility Criteria

BDS Clause Number 8

Services and Their related documents:
See section Required Services and Scope of Work

BDS Clause Number 9

Price schedule will be provided according to the format defined and acquired.
see section price schedule.

BDS Clause Number 10

Specifications:

see section of specifications.

C. Preparation of Bids

BDS Clause Number 11

The price shall be **Fixed**.

BDS Clause Number 12

Currency of the Bids shall be : **PKR**

BDS Clause Number 13

The Bids/Bid Validity period shall be: **120 Days**

BDS Clause Number 14

The amount of Bid Security shall be as defined in Bid Security Section for items and lots given in **BDS 6**
The Bid Security shall be in the form of: **Pay Order, Call at Deposit, Bank Guarantee**

BDS Clause Number 15

The Bids security shall be valid for twenty-eight (28) days beyond the expiry of the Bids validity period specified in the bidding documents, for example the bid validity is 90 days so the bid security shall be valid for 90+28 = 118 days.

BDS Clause Number 16

Alternative Bids to the requirements of the bidding documents will not be permitted.

D. Submission of Bids

BDS Clause Number 17

Bid shall be submitted online on EPADS v2.0 whereas hard copy of the bid security should be submitted to the following;

ST-4/B, Block 14, Sir Shah Suleman Road, Gulshan-e-Iqbal, Karachi, Pakistan

Bids that are not submitted on EPADS v2.0 shall be disqualified.

The deadline for Bids submission is: **Thursday, October 8, 2026 11:30 AM**

E. Opening and Evaluation of Bids

BDS Clause Number 18

The Bids opening shall take place on **EPADS v2.0**.

Day *:* ***Thursday***

Date: ***Thursday, October 8, 2026***

Time *:* ***12:00 PM***

BDS Clause Number 19

Selection technique adopted will be: **Least Cost Based Selection (LCBS)**
see Evaluation Criteria

F. Award of Contract

BDS Clause Number 20

The Performance guarantee shall: **5.00%**.

The Performance Guarantee shall be acceptable in the form of: **Bank Guarantee**

21.

51.1

Arbitrator shall be appointed by mutual consent of the both parties.

G. Review of Procurement Decisions

BDS Clause Number 22

Grievence against this procurement shall be submitted online on EPADS v2.0.

Eligibility Criteria

Bidder's Type	Required Registration
Any	FBR (NTN) PEC

Eligibility Criteria	Document
(Having Valid PEC Certificate Category C-6 or above with sub-category CE-10)	Yes
The bidder must deposit/submit the physical bid bond to the Tender Room (SSGC HO) before the bid submission Time and, the bid will be liable for rejection.	No
Complete tender documents (Tender Terms, BoQ, Price Schedule & Annexures etc. must be uploaded duly sign & stamp otherwise bid will be liable for rejection	Yes

Evaluation Criteria

Least Cost Based Selection (LCBS)

Weightage

Technical Evaluation %
100

Technical Marks	100
Passing Marks	**65**
Evaluation Criteria for Technical Qualification (Annexure A)	
Evaluation Criteria with forms attached at Annexure A (Minimum Qualifying marks = 65) (Qualitative)(Doc Required)	100

Required Services

Lot Title : Renovation Works of CP Stations (16 Nos.)

Bid Security : 158500 PKR

Position	Delivery Schedule	Quantity
SC172429 RENOVATION WORKS OF CP STATIONS (16 NOS.) & GUARD ROOMS (02 NOS.) AT HQ-3, HYDERABAD SECTION (AS PER BOQ-SECTION-VIII)	**Address:** Operation Store KT **Schedule:** 120 Days **Quantity:** 1/job	1/job
SC172431 NEW CONSTRUCTION OF CARE TAKER ROOMS (02 NOS.) AT HQ-3, HYDERABAD SECTION (AS PER BOQ-SECTION-VIII)	**Address:** Operation Store KT **Schedule:** 120 Days **Quantity:** 1/job	1/job

Related Services :

No

PUBLIC PROCUREMENT REGULATORY AUTHORITY (PPRA) EPADS

Services Specifications

Lot Title : Renovation Works of CP Stations (16 Nos.)

Position: SC172429 RENOVATION WORKS OF CP STATIONS (16 NOS.) & GUARD ROOMS (02 NOS.) AT HQ-3, HYDERABAD SECTION (AS PER BOQ-SECTION-VIII)

Specifications / Requirements:

SC172429 RENOVATION WORKS OF CP STATIONS (16 NOS.) & GUARD ROOMS (02 NOS.) AT HQ-3, HYDERABAD SECTION (AS PER BOQ-SECTION-VIII)

Position: SC172431 NEW CONSTRUCTION OF CARE TAKER ROOMS (02 NOS.) AT HQ-3, HYDERABAD SECTION (AS PER BOQ-SECTION-VIII)

Specifications / Requirements:

SC172431 NEW CONSTRUCTION OF CARE TAKER ROOMS (02 NOS.) AT HQ-3, HYDERABAD SECTION (AS PER BOQ-SECTION-VIII)

Scope of Work

Attached with SSGC Tender Document

PUBLIC PROCUREMENT REGULATORY AUTHORITY (PPRA) EPADS

Price Schedule

For Individual Positions

#	Position Title	Quantity	Unit Price (PKR)	Total Price (PKR)	Delivery Location	Delivery Period / Year	Country of Origin
1							
2							

For Lots

#	Lot Title	Total Lot Price (PKR)	Country of Origin
1	[Lot 1 Title]		

PUBLIC PROCUREMENT REGULATORY AUTHORITY
(PPRA)
EPADS

General Conditions of Contract

A. General

1. **Definitions**

1.1. Unless the context otherwise requires, the following terms whenever used in this Contract shall have the same meaning and shall be interpreted as indicated

1.1.1. “Applicable Law” means the laws and any other instruments having the force of law in the Government’s Country, or in such other country as may be specified in the Special Conditions of the Contract (SC), as they may be issued and in force from time to time;

1.1.2. “The Contract” means an agreement enforceable by law;

1.1.3. “The Contract Price” means the price payable to the Contractor under the Contract for the full and proper performance of its contractual obligations;

1.1.4. “The Services” means the work to be performed by the Contractor pursuant to this Contract and as prescribed in the Specifications and Schedule of Activities included in the Contractor’s Bid;

1.1.5. “Ancillary Services” means those services ancillary to the provision of Services, such as transportation and insurance, and any other incidental services, such as installation, commissioning, provision of technical assistance, training, and other such obligations of the Contractor covered under the Contract;

1.1.6. “GCC” means the General Conditions of Contract contained in this section;

1.1.7. “SCC” means the Special Conditions of Contract by which the GCC may be amended or supplemented;

1.1.8. **“**Day” means calendar day unless indicated otherwise;

1.1.9. “Effective Date” means the date on which this Contract comes into force and effect;

1.1.10. “The Contractor” means the individual or corporate body whose Bids to provide the Services has been accepted by the Procuring Agency;

1.1.11. “The Project Site,” where applicable, means the place or places named in Bid Data Sheet and technical Specifications;

1.1.12. “Government” means the Government of Pakistan;

1.1.13. “Local Currency” means the currency of Pakistan;

1.1.14. “In Writing” means communicated in written form with proof of receipt;

1.1.15. “Completion Date” means the date of completion of the Services by the Contractor as certified by the Procuring Agency;

1.1.16. “Foreign Currency” means any currency other than the currency of the country of the Procuring Agency;

1.1.17. “Party” means the Procuring Agency or the Contractor, as the case may be, and “Parties” means both of them;

1.1.18. "Service" means any object of procurement other than goods or works;

1.1.19. “Subcontractor” means any entity to which the Bidder subcontracts any part of the Services.

2. **Applicable Law**

2.1. The contract shall be governed and interpreted in accordance with the laws of Pakistan, unless otherwise specified in SCC.

3. **Language**

3.1. The Contract as well as all correspondence and documents relating to the Contract exchanged between the Contractorand the Procuring Agency, shall be written in the **English language** unless otherwise stated in the **SCC** . Supporting documents and printed literature that are part of the Contract may be in another language provided these are accompanied by an accurate translation of the relevant passages in English, in which case, for purposes of interpretation of the Contract, this translation shall govern.

4. **Notices**

4.1. Any notice, request, or consent made pursuant to this Contract shall be in writing and shall be deemed to have been made when delivered in person to an authorized representative of the Party to whom the communication is addressed, or when sent by registered mail, telex, telegram, or facsimile to such Party at the address specified in the **SCC**.

5. **Location**

5.1. The Services shall be performed at such locations as the Procuring Agency may approve and as specified in **SCC.**

6. **Authorized Representatives / Authority of Member in charge**

6.1. Any action required or permitted to be taken, and any document required or permitted to be executed, under this Contract by the Procuring Agency or the Contractor may be taken or executed by the officials specified in the **SCC**.

B. Commencement, Completion, Modification, and Termination of Contract

7. **Effectiveness of Contract**

7.1. This Contract shall come into effect on the date the Contract is signed by both parties and such other later date as may be stated in the **SCC.**

8. **Commencement of Services**

8.1. The Contractor shall confirm availability of Key Experts and begin carrying out the Services not later than the number of days after the Effective Date specified in the **SCC.**

9. **Program schedule**

9.1. Before commencement of the Services, the Contractor shall submit to the Procuring Agency for approval a Program showing the general methods, arrangements, order and timing for all activities. The Services shall be carried out in accordance with the approved Program as updated.

10. **Starting Date/Expiration Date**

10.1. The Contractor shall start carrying out the Services Five (05) days after the date the Contract becomes effective, or at such other date as may be specified in the **SCC.**

10.2. Unless terminated earlier pursuant to Clause **GCC 14** hereof, this Contract shall expire at the end of such time period after the Effective Date as specified in the **SCC.**

11. **Entire Agreement**

11.1. This Contract contains all covenants, stipulations and provisions agreed by the Parties. No agent or representative of either Party has authority to make, and the Parties shall not be bound by or be liable for, any statement, representation, promise or agreement not set forth herein.

12. **Modification**

12.1. Any modification or variation of the terms and conditions of this Contract, including any modification or variation of the scope of the Services, may only be made by written agreement between the Parties. However, each Party shall give due consideration to any modification(s) or variation(s) made by the other Party.

12.2. In cases of any modification(s) or variation(s), the prior written consent of the Procuring Agency is required.

13. **Force Majeure**

13.1. **Definition**
For the purposes of this Contract, “Force Majeure” means an event which is beyond the reasonable control of a Contractor and which makes a Contractor’s performance of its obligations under the Contract impossible or so impractical as to be considered impossible under the circumstances.

13.2. **No Breach of Contract**
The failure of a Party to fulfill any of its obligations under the contract shall not be considered to be a breach of, or default under, this Contract in so far as such inability arises from an event of Force Majeure, provided that the Party affected by such an event (a) has taken all reasonable precautions, due care and reasonable alternative measures in order to carry out the terms and conditions of this Contract, and (b) has informed the other Party as soon as possible about the occurrence of such an event.

13.3. **Extension of Time**

Any period within which a Contractor shall, pursuant to this Contract, complete any action or task, shall be extended for a period equal to the time during which such Party was unable to perform such action as a result of Force Majeure.

13.4. **Payments**

During the period of their inability to perform the Services as a result of an event of Force Majeure, the Contractor shall be entitled to continue to be paid under the terms of this Contract, as well as to be reimbursed for additional costs reasonably and necessarily incurred by them during such period for the purposes of the Services and in reactivating the Service after the end of such period.

14. **Termination**

14.1. **By the Procuring Agency**

The Procuring Agency may terminate this Contract in case of the occurrence of any of the events specified in paragraphs (a) through (e) of this Clause. In such an occurrence the Procuring Agency shall give at least thirty (30) calendar days' written notice of termination to the Contractor in case of the events referred to in (a) through (d); at least sixty (60) calendar days' written notice in case of the event referred to in (e);

14.1.1. If the Contractor fails to remedy a failure in the performance of its obligations hereunder, as specified in a notice of suspension;

14.1.2. If the Contractor becomes (or, if the Contractor consists of more than one entity, if any of its members becomes) insolvent or bankrupt or enter into any agreements with their creditors for relief of debt or take advantage of any law for the benefit of debtors or go into liquidation or receivership whether compulsory or voluntary;

14.1.3. If the Contractor fails to comply with any final decision reached as a result of arbitration proceedings;

14.1.4. If, as the result of Force Majeure, the Contractor is unable to perform a material portion of the Services for a period of not less than sixty (60) calendar days;

14.1.5. If the Procuring Agency, in its sole discretion and for any reason whatsoever, decides to terminate this Contract;

14.2. **By the Contractor**

The Contractor may terminate this Contract, by not less than thirty (30) calendar days' written notice to the Procuring Agency, in case of the occurrence of any of the events specified in paragraphs (a) through (d) of this Clause.

14.2.1. If the Procuring Agency fails to pay any money due to the Contractor pursuant to this Contract and not subject to dispute within forty-five (45) calendar days after receiving written notice from the Contractor that such payment is overdue;

14.2.2. If, as the result of Force Majeure, the Contractor is unable to perform a material portion of the Services for a period of not less than sixty (60) calendar days;

14.2.3. If the Procuring Agency fails to comply with any final decision reached as a result of arbitration;

14.2.4. If the Procuring Agency is in material breach of its obligations pursuant to this Contract and has not remedied the same within forty-five (45) days (or such longer period as the Bidder may have subsequently approved in writing) following the receipt by the Procuring Agency of the Contractor's notice specifying such breach.

C. Obligations of the Contractor

15. **General**

15.1. **Standard of Performance**

15.1.1. The Contractor shall perform the Services and carry out the Services with all due diligence, efficiency and economy, in accordance with generally accepted professional standards and practices, and shall observe sound management practices, and employ appropriate technology and safe and effective equipment, machinery, materials and methods. The Contractor shall always act, in respect of any matter relating to this Contract or to the Services, as a faithful adviser to the Procuring Agency, and shall at all times support and safeguard the Procuring Agency's legitimate interests in any dealings with the third parties;

15.1.2. The Contractor shall employ and provide such qualified and experienced Experts and Sub-Contractors as are required to carry out the Services.

15.2. **Law Applicable to Services**

The Contractor shall perform the Services in accordance with the Contract and in accordance with the Law of Pakistan and shall take all practicable steps to ensure that any of its Experts and Sub-Bidders, comply with the Applicable Law.

16. **Conflict of Interests**

16.1. **Contractor Not to Benefit from Commissions and Discounts**

The remuneration of the Contractor shall constitute the Contractor's sole remuneration in connection with this Contract or the Services, and the Contractor shall not accept for their own benefit any trade commission, discount, or similar payment in connection with activities pursuant to this Contract or to the Services or in the discharge of their obligations under the Contract, and the Contractor shall use their best efforts to ensure that the Personnel, any Subcontractors, and agents of either of them similarly shall not receive any such additional remuneration.

16.2. **Contractor and Affiliates Not to be Otherwise Interested in Project**

The Contractor agree that, during the term of this Contract and after its termination, the Contractor and its affiliates, as well as any Subcontractor and any of its affiliates, shall be disqualified from providing Services (other than the Services and any continuation thereof) for any project resulting from or closely related to the Services.

16.3. **Prohibition of Conflicting Activities**

Neither the Bidder nor its Subcontractors nor the Personnel shall engage, either directly or indirectly, in any of the following activities:

16.3.1. during the term of this Contract, any business or professional activities in the Government's country which would conflict with the activities assigned to them under this Contract;

16.3.2. during the term of this Contract, neither the Contractor nor their Subcontractors shall hire public employees in active duty or on any type of leave, to perform any activity under this Contract;

16.3.3. after the termination of this Contract, such other activities as may be specified in the **SCC.**

17. **Insurance to be Taken Out by the Contractor**

17.1. The Contractor(a) shall take out and maintain, and shall cause any Subcontractors to take out and maintain, at its (or the Sub-contractors', as the case may be) own cost but on terms and conditions approved by the Procuring Agency, insurance against the risks, and for the coverage, as shall be specified in the **SCC**; and (b) at the Procuring Agency's request, shall provide evidence to the Procuring Agency showing that such insurance has been taken out and maintained and that the current premiums have been paid.

18. **Contractor's Actions Requiring Procuring Agency's Prior Approval**

18.1. The Contractor shall obtain the Procuring Agency's prior approval in writing before taking any of the following actions:

18.1.1. appointing such members of the Personnel not provided by the Contractor;

18.1.2. changing the Program of activities; and

18.1.3. any other action that may be specified in the **SCC.**

19. **Reporting Obligations**

19.1. The Contractor shall submit to the Procuring Agency the reports and documents in the numbers, and within the periods as prescribed by the Procuring Agency.

20. **Liquidated Damages**

20.1. **Payments of Liquidated Damages**
The Contractor shall pay liquidated damages to the Procuring Agency at the rate per day stated in the **SCC** for each day that the Completion Date is later than the Intended Completion Date. The total amount of liquidated damages shall not exceed the amount defined in the **SCC**. The Procuring Agency may deduct liquidated damages from payments due to the Contractor. Payment of liquidated damages shall not affect the Contractor's liabilities.

20.2. **Correction for Over-payment**
If the Intended Completion Date is extended after liquidated damages have been paid, the Procuring Agency shall correct any overpayment of liquidated damages by the Contractor by adjusting the next payment certificate. The Contractor shall be paid interest on the overpayment, calculated from the date of payment to the date of repayment, at the rates specified in **SCC.**

20.3. **Lack of performance penalty**

If the Contractor has not corrected a Defect within the time specified in the Procuring Agency's notice, a penalty for Lack of performance will be paid by the Contractor. The amount to be paid will be calculated as a percentage of the cost of having the Defect corrected, assessed as specified in the Contractor

21. **Performance Guarantee**

21.1. Within the time stipulated in the acceptance letter from the Procuring Agency, the successful Bidder shall furnish the Performance Guarantee in shape and amount **specified in SCC.**

21.2. The proceeds of the Performance Guarantee shall be payable to the Procuring agency as compensation for any loss resulting from the Supplier's failure to complete its obligations under the Contract.

21.3. The Performance Guarantee shall be denominated in the currency of the Contract, or in a freely convertible currency acceptable to the Procuring agency and shall be in the acceptable form as specified in **SCC**.

21.4. The Performance Guarantee will be discharged by the Procuring agency and returned to the Supplier not later than thirty (30) days following the date of completion of the Supplier's performance obligations under the Contract, including any warranty obligations, unless otherwise **specified in SCC.**

22. **Sustainable Procurement**

22.1. The Contractor shall conform to the sustainable procurement contractual provisions, if and as specified in the **SCC.**

D. Contractor's Personnel

23. **Description of Personnel**

23.1. The titles, agreed job descriptions, minimum qualifications, and estimated periods of engagement in the carrying out of the Services of the Contractor's Key Personnel. The Key Personnel listed by title as well as by name are hereby approved by the Procuring Agency.

24. **Removal and / or Replacement of Personnel**

24.1. Except as the Procuring Agency may otherwise agree, no changes shall be made in the Key Personnel. If, for any reason beyond the reasonable control of the Contractor, it becomes necessary to replace any of the Key Personnel, the Contractor shall provide as a replacement a person of equivalent or better qualifications.

24.2. If the Procuring Agency finds that any of the Personnel have (i) committed serious misconduct or have been charged with having committed a criminal action, or (ii) have reasonable cause to be dissatisfied with the performance of any of the Personnel, then the Contractor shall, at the Procuring Agency's written request specifying the grounds thereof, provide as a replacement a person with qualifications and experience acceptable to the Procuring Agency.

24.3. The Contractor shall have no claim for additional costs arising out of or incidental to any removal and/or replacement of Personnel.

E. Obligations of the Procuring Agency

25. **Change in the Applicable Law**

25.1. If, after the date of this Contract, there is any change in the Applicable Law with respect to taxes and duties which increases or decreases the cost of the Services rendered by the Contractor, then the remuneration and reimbursable expenses otherwise payable to the Contractor under this Contract shall be increased or decreased accordingly by agreement between the Parties, and corresponding adjustments shall be made to the amounts referred in the **SCC.**

26. **Services and Facilities**

26.1. The Procuring Agency shall make available to the Contractor and the Experts, for the purposes of the Services and free of any charge, the services, facilities and property described in the Terms of Reference, at the times and in the manner specified in the Terms of Reference.

26.2. In case that such services, facilities and property shall not be made available to the Contractor, the Parties shall agree on (i) any time extension that it may be appropriate to grant to the Contractor for the performance of the Services, (ii) the manner in which the Contractor shall procure any such services, facilities and property from other sources, and (iii) the additional payments, if any, to be made to the Contractor as a result thereof.

F. Payments to the Contractor

27. **Contract Price**

27.1. The price payable shall be in Pakistani Rupees unless otherwise specified in the **SCC**.

28. **Terms and Conditions of Payment**

28.1. Payments will be made to the Contractor according to the payment schedule stated in the **SCC** and as per actual invoice submitted by the Contractor.

28.2. Unless otherwise stated in the **SCC**, the advance payment shall be made against the provision by the Contractor of a bank guarantee for the same amount, and shall be valid for the period stated in the **SCC.** Any other payment shall be made after the conditions listed in the **SCC** for such payment have been met, and the Contractor have submitted an invoice to the Procuring Agency specifying the amount due.

29. **Quality Control Identifying Defects**

29.1. The principle and modalities of Inspection of the Services by the Procuring Agency shall be as indicated in the **SCC.** The Procuring Agency shall check the Contractor's performance and notify him of any Defects that are found. Such checking shall not affect the Contractor's responsibilities. The Procuring Agency may instruct the Contractor to search for a Defect and to uncover and test any service that the Procuring Agency considers may have a Defect. Defect Liability Period is as defined in the **SCC**.

30. **Correction of Defects, and Lack of Performance Penalty**

30.1. The Procuring Agency shall give notice to the contractor of any Defects before the end of the Contract. The Defects liability period shall be extended for as long as Defects remain to be corrected.

30.2. Every time notice a Defect is given; the contractor shall correct the notified Defect within the length of time specified by the Procuring Agency's notice.

30.3. If the contractor has not corrected a Defect within the time specified in the Procuring Agency's notice, the Procuring Agency will assess the cost of having the Defect corrected, the contractor will pay this amount, and a Penalty for Lack of Performance.

31. **Settlement of Disputes Amicable Settlement**

31.1. The Parties shall use their best efforts to settle amicably all disputes arising out of or in connection with this Contract or its interpretation.

32. **Dispute Settlement**

32.1. **Arbitration**
If any dispute of any kind whatsoever shall arise between the procuring agency and the contractor in connection with or arising out of the Contract, including without prejudice to the generality of the foregoing, any question regarding its existence, validity or termination, or the execution of the contract, the parties shall seek to resolve any such dispute or difference by mutual consultation. If the parties fail to resolve such a dispute or difference even after negotiations or mediation, then the dispute shall be referred within fourteen (14) days in writing by either party to the Arbitrator, with a copy to the other party.
Any dispute in respect of which a notice of intention to commence arbitration has been given, in accordance with **GCC sub-clause 32.1**, shall be finally settled by arbitration. Arbitration may be commenced prior to or after completion of the Contract. Arbitration proceedings shall be conducted in accordance with Arbitration Act 1940. Notwithstanding any reference to arbitration herein, the parties shall continue to perform their respective obligations under the Contract unless otherwise agreed. The Procuring Agency shall continue to pay the Contractor any undisputed amounts due under the Contract during the resolution of any dispute.

PUBLIC PROCUREMENT REGULATORY AUTHORITY (PPRA) EPADS

Special Conditions of Contract

SECTION VIII. SPECIAL CONDITIONS OF CONTRACT

The following Special Conditions of Contract shall supplement the General Conditions of Contract. Whenever there is a conflict, the provisions herein shall prevail over those in the Conditions of Contract. The corresponding clause number of the GCC is indicated in parentheses.

Number of GC Clause

Amendments of, and Supplements to, Clauses in the General Conditions of Contract

Definitions

The Procuring Agency is: SSGC (PROCUREMENT DEPARTMENT), DCM ST-4/B, Block 14, Sir Shah Suleman Road, Gulshan-e-Iqbal, Karachi, Pakistan

The Supplier is:

The title of the subject procurement is:SSGC/SC/PT/EPADS2/14442 (Civil Works Renovation Works of CP Stations (16 Nos.) & Guard Rooms (02 Nos.) and New Construction of Care Taker Room (02 nos.) at Different Locations In Hq-3, Hyderabad Section (As Per BOQ/Criteria)

Number of GC Clause 2

Applicable/Governing Law:

The Contract shall be interpreted in accordance with the laws of Islamic Republic of Pakistan

Number of GC Clause 3

Language:

The language of the Contract, all correspondence and communications to be given, and all other documentation to be prepared and supplied under the Contract shall be in **English.**

Number of GC Clause 4

Notices:

The addresses for the notices are:

Procuring Agency:

SSGC (PROCUREMENT DEPARTMENT), DCM
ST-4/B, Block 14, Sir Shah Suleman Road, Gulshan-e-Iqbal, Karachi, Pakistan
+92-322-821489
MMTE@SSGC.COM.PK

Contractor/ Bidder:

[Name, address and telephone number].

The Contractor/ Bidder’s Representative(s)

[Name, address, telephone number and e-mail address]

Number of GC Clause 6.1

The Authorized Representatives are:

For the Procuring Agency:

SSGC (PROCUREMENT DEPARTMENT), DCM
ST-4/B, Block 14, Sir Shah Suleman Road, Gulshan-e-Iqbal, Karachi, Pakistan
+92-322-821489
MMTE@SSGC.COM.PK

For the Bidder:

Name: ……

Designation: ……..

Address: ……..

Number of GC Clause 7

Effectiveness of the contract

The Contractor/Bidder shall be effective within ….. days from the date of signature of the Contract by both parties

Number of GC Clause 8

Commencement of Contract:

The Contractor/ Bidder shall provide Non-Consultancy Services from the effective date of contract.

Number of GC Clause 10.2

Expiration of Contract:

The time period shall be …….

Number of GC Clause 14

Termination

In the event of termination of the contract due to any reason as already defined in the General Conditions of Contract, the Bidder shall be responsible for providing to the Authority the Services till the time of alternate arrangements.

Number of GC Clause 16

Conflict of Interest:

The Procuring Agency reserves the right to determine on a case-by-case basis whether the Bidder should be disqualified from providing services due to a conflict of a nature described in Clause GCC C2**.**

Number of GC Clause 20

Liquidated Damages

If the Bidder fails to provide services as required under the contract or in case of any data loss/data breach or any incident compromising the data security or other such failures related to any services, the Bidder shall pay to the Procuring Agency as Liquidated Damages at a rate of **0.01%** to **10.00%** of the Contract value, in accordance with the extent of performance failure & the cost of investigating such incidents as judged by the Authority.

Number of GC Clause 21

Performance Guarantee:

The amount of performance guarantee shall be 5.00% of the contract price in acceptable form of Bank Guarantee

Number of GC Clause 27

Currency of Payment:

All the payment to be released to the contractor/Bidder shall be in Pakistani Rupees.

Number of GC Clause F

Payment terms:

Payment will be made to the Bidder against the procured Goods and services according to the actual invoice or running bills submitted by the Bidder against the services provided within the time given in the conditions of the contract.

Number of GC Clause F

Identifying Defects:

The Authority reserves the right at any time to inspect the premises of the provider to inspect the goods and monitor the goods being provided.

Inspections & Tests Requirements

Attached with SSGC Tender Document

Delivery & Documents

Attached with SSGC Tender Document

Number of GC Clause F 5 & 6

Following is the guidance for Dispute Resolution

i. If any dispute of any kind whatsoever shall arise between the Authority and the Bidder in connection with or arising out of the Contract, including without prejudice to the generality of foregoing, any question regarding its existence, validity, termination and the execution of the Contract – whether during developing phase or after their completion and whether before or after the termination, abandonment or breach of the Contract – the parties shall

seek to resolve any such dispute or difference by mutual diligent negotiations in good faith within 14 (fourteen) days following a notice sent by one Party to the other Party in this regard**.**

ii. At future of negotiation the dispute shall be resolved through mediation and mediator shall be appointed with the mutual consent of the both parties**.**

iii. At the event of failure of mediation to resolve the dispute relating to this contract such dispute shall finally be resolved through binding Arbitration by sole arbitrator in accordance with Arbitration Act 1940. The arbitrator shall be appointed by mutual consent of the both parties**.** The Arbitration shall take place in Islamabad, Pakistan and proceedings will be conducted in English language.

iv. The cost of the mediation and arbitration shall be shared by the parties in equal proportion however the both parties shall bear their own costs and lawyer's fees regarding their own participation in the mediation and arbitration. However, the Arbitrator may make an award of costs upon the conclusion of the arbitration making any party to the dispute liable to pay the costs of another party to the dispute**.**

v. Arbitration proceedings as mentioned in the above clause regarding resolution of disputes may be commenced prior to, during or after completion of the contract.

Notwithstanding any reference to the arbitration herein, the parties shall continue to perform their respective obligations under the Contract unless they otherwise agree that the Authority shall pay the Bidder any monies due to the Bidder.

Arbitrator's fee:

The fee shall be specified in Pak Rupees, as determined by the Arbitrator, which shall be shared equally by both parties**.**

Appointing Authority for Arbitrator:

By the Mutual Consent or in accordance with the provisions of Arbitration Act, 1940, in case the parties fail to reach a consensus on the name of sole arbitrator, any party may submit an application to the Chief Justice Islamabad High Court for appointment of sole arbitrator. The Chief Justice IHC may appoint a former judge of any High Court or Supreme Court as the sole arbitrator to resolve the dispute between the parties.

Rules of procedure for arbitration proceedings:

Any dispute between the Authority and a Bidder who is a national of the Islamic Republic of Pakistan arising in connection with the present Contract shall be referred to adjudication or arbitration in accordance with the laws of the Islamic Republic of Pakistan including Arbitration Act 1940, however above provision shall prevail in referring the case to the Arbitrator.

Place of Arbitration and Award:

The arbitration shall be conducted in English language and place of arbitration shall be at Islamabad. The award of the arbitrator shall be final and shall be binding on the parties.

Bid Securing Declaration

Form 9: Bid Securing Declaration

Date: *[insert date (as day, month and year)]*

Bid No.:***P94024***

To: **SSGC (PROCUREMENT DEPARTMENT), DCM ST-4/B, Block 14, Sir Shah Suleman Road, Gulshan-e-Iqbal, Karachi, Pakistan**

We, the undersigned, declare that:

We understand that, according to your conditions, Bids must be supported by a Bid Securing Declaration.

We accept that we will be blacklisted and henceforth cross debarred for participating in respective category of public procurement proceedings for a period of (not more than) six months, if fail to abide with a bid securing declaration, however without indulging in corrupt and fraudulent practices, if we are in breach of our obligation(s) under the Bid conditions, because we:

1. have withdrawn or modified our Bid during the period of Bid Validity specified in the Form of Bid;

2. Disagreement to arithmetical correction made to the Bid price; or

3. having been notified of the acceptance of our Bid by the Procuring Agency during the period of Bid Validity, (i) failure to sign the contract if required by Procuring Agency to do so or (ii) fail or refuse to furnish the Performance Security or to comply with any other condition precedent to signing the contract specified in the Bidding Documents.

We understand this Bid Securing Declaration shall expire if we are not the successful

Bidder, upon the earlier of (i) our receipt of your notification to us of the name of the successful Bidder; or (ii) twenty-eight (28) days after the expiration of our Bid.

Contract Form

SECTION IX: CONTRACT FORMS

THIS AGREEMENT made the _____ day of _____ 20_____ between **SSGC (PROCUREMENT DEPARTMENT), DCM ST-4/B, Block 14, Sir Shah Suleman Road, Gulshan-e-Iqbal, Karachi, Pakistan**

(hereinafter called "the Procuring Agency") of the one part and *[name of Bidder]* of *[city and country of Bidder]* (hereinafter called "the Bidder") of the other part:

WHEREAS the Procuring Agency invited Bids for provision of goods, viz., **SSGC/SC/PT/EPADS2/14442 (Civil Works Renovation Works of CP Stations (16 Nos.) & Guard Rooms (02 Nos.) and New Construction of Care Taker Room (02 nos.) at Different Locations In Hq-3, Hyderabad Section (As Per BOQ/Criteria) (*P94024*)** and has accepted a Bids by the Bidder for the provision of Goods in the sum of *[contract price in words and figures]* (hereinafter called "the Contract Price").

NOW THIS CONTRACT WITNESSETH AS FOLLOWS:

1. In this Contract words and expressions shall have the same meanings as are respectively assigned to them in the Conditions of Contract referred to.

2. The following documents shall be deemed to form and be read and construed as part of this Contract, In the event of any ambiguity or conflict between the Contract Documents listed below, the order of precedence shall be the order in which the Contract Documents are listed below:-

1. This form of Contract;
2. the Form of Bids and the Price Schedule submitted by the Bidder;
3. the Schedule of Requirements;
4. the Technical Specifications;
5. the Special Conditions of Contract;
6. the General Conditions of the Contract;
7. the Procuring Agency's Letter of Acceptance; and
8. [*add here: any other documents*]

3. In consideration of the payments to be made by the Procuring Agency to the Bidder as hereinafter mentioned, the Bidder hereby covenants with the Procuring Agency to provide the Goods related services and to remedy defects therein in conformity in all respects with the provisions of the Contract.

4. The Procuring Agency hereby covenants to pay the Bidder in consideration of the provision of Goods and the remedying of defects therein, the Contract Price or such other sum as may become payable under the provisions of the contract at the times and in the manner prescribed by the contract.

IN WITNESS whereof the parties hereto have caused this Contract to be executed in accordance with their respective laws the day and year first above written.

Signed, sealed, delivered by _____the _____ (for the Procuring Agency)

Witness to the signatures of the Procuring Agency:

……

Signed, sealed, delivered by _____the _____ (for the Procuring Agency)

Witness to the signatures of the Bidder: ……

PUBLIC PROCUREMENT REGULATORY AUTHORITY (PPRA) EPADS

Integrity Pact

Integrity Pact

DECLARATION OF FEES, COMMISSION AND BROKERAGE ETC. PAYABLE BYTHE SUPPLIERS OF GOODS, SERVICES & WORKS IN CONTRACTS WORTH RS.10.00 MILLION OR MORE

Contract Number: Contract Value: Contract Title:

Dated:

[Name of Supplier] hereby declares that it has not obtained or induced the procurement of any contract, right, interest, privilege or other obligation or benefit from Government of Pakistan or any administrative subdivision or agency thereof or any other entity owned or controlled by it (GoP) through any corrupt business practice.

Without limiting the generality of the foregoing [Name of Supplier] represents and warrants that it has fully declared the brokerage, commission, fee etc. paid or payable to anyone and not given or agreed to give and shall not give or agree to give to anyone within or outside Pakistan either directly or indirectly through any natural or juridical person, including its affiliate, agent, associate, broker, consultant, director, promoter, shareholder, sponsor or subsidiary, any commission, gratification, bribe, finder's fee or kickback, whether described as consultations fee or otherwise, with the object of obtaining or inducing the procurement of a contract, right, interest, privilege or other obligation or benefit in whatsoever form from GoP, except that which has been expressly declared pursuant hereto.

[Name of Supplier] certifies that it has made and will make full disclosure of all agreements and arrangements with all persons in respect of or related to the transaction with GoP and has not taken any action or will not take any action to circumvent the above declaration, representative or warranty.

[Name of Supplier] accepts full responsibility and strict liability for making and false declaration, not making full disclosure, misrepresenting fact or taking any action likely to defeat the purpose of this declaration, representation and warranty. It agrees that any contract, right interest, privilege or other obligation or benefit obtained or procured as aforesaid shall, without prejudice to any other right and remedies available to GoP under any law, contract or other instrument, be voidable at the option of GoP.

Notwithstanding any rights and remedies exercised by GoP in this regard, [Name of Supplier] agrees to indemnify GoP for any loss or damage incurred by it on account of its corrupt business practices and further pay compensation to GoP in an amount equivalent to ten time the sum of any commission, gratification, bribe, finder's fee or kickback given by [Name of Supplier] as aforesaid for the purpose of obtaining or inducing the procurement of any contract, right, interest, privilege or other obligation or benefit in whatsoever form from GoP.

Performance Guarantee Form

Performance Guarantee Form

To: **SSGC (PROCUREMENT DEPARTMENT), DCM ST-4/B, Block 14, Sir Shah Suleman Road, Gulshan-e-Iqbal, Karachi, Pakistan**

WHEREAS *[name of Bidder]* (hereinafter called "the Bidder") has undertaken, in pursuance of Contract No. *[reference number of the contract]* dated *[insert date]* for provision of Goods (hereinafter called "the Contract").

AND WHEREAS it has been stipulated by you in the said Contract that the Bidder shall furnish you with a Bank Guarantee by a reputable bank for the sum specified therein as security for compliance with the Bidder's performance obligations in accordance with the Contract.

AND WHEREAS we have agreed to give the Bidders guarantee:

THEREFORE, WE hereby affirm that we are Guarantors and responsible to you, on behalf of the Bidder, up to a total of *[amount of the guarantee in words and figures]*, and we undertake to pay you, upon your first written demand declaring the Bidder to be in default under the Contract and without cavil or argument, any sum or sums within the limits of *[amount of guarantee]* as aforesaid, without your needing to prove or to show grounds or reasons for your demand or the sum specified therein.

This guarantee is valid until the: *[insert date]*

Signature and seal of the Guarantors

_____

[name of bank or financial institution]

_____

[address]

[date}

PUBLIC PROCUREMENT REGULATORY AUTHORITY (PPRA) EPADS

Annexure

SSGC/SC/PT/EPADS2/14442

SSGC/SC/PT/EPADS2/14442

Civil Works Renovation Works of CP Stations (16 Nos.) & Guard Rooms (02 Nos.) and New Construction of Care Taker Room (02 nos.) at Different Locations In Hq-3, Hyderabad Section (As Per BOQ/Criteria) (Under Single Stage Two Envelope Bidding Procedure) (Having Valid PEC Certificate Category C-6 or above with sub-category CE-10) (On Complete Package Basis).

The priced bids shall be submitted along with FIXED Bid Bond Rs.1,58,500 (One Hundred Fifty-Eight Thousand Five Hundred Rupees Only) in the form of Pay order / Demand Draft in favor of Sui Southern Gas Company Limited. No bid shall be entertained without bid bond / earnest money.

The bidder must deposit/submit the physical bid bond to the Tender Room (SSGC HO) before the bid submission Time and if required to submit/upload the valid PEC Certificate mentioned in the Tender Docs; otherwise, the bid will be liable for rejection.

Information (Read-Only)

See Form Under Additional Forms and Documents: **SSGC/SC/PT/EPADS2/14442** (page number: 69)

Evaluation Criteria with forms attached at Annexure A

SSGC/SC/PT/EPADS2/14442

Renovation Works of CP Stations (16 Nos

MANDATORY REQUIREMENTS

a) Registration with PEC for category C-6 and above having sub category CE-10

b) Registration with Sindh Board of Revenue (SBR)

c) Banker's Confidential Certificate, direct from Bank (not older than last 3 months from date of bid submission)

d) Income Tax Assessment Order or Income Tax Clearance Certificate (Last Three Years).

e) Audit Report for the last three (03) years from Government Registered Reputed Audit Firm.

Attached Evaluation Criteria for Technical Qualification in SSGC Tender Document

Information (Read-Only)

See Form Under Additional Forms and Documents: **Evaluation Criteria with forms attached at Annexure A** (page number: 134)

SSGC/SC/PT/EPADS2/14442 Extension-1

SSGC/SC/PT/EPADS2/14442

This refers to above mentioned tender enquiry the bid submission / opening date has been extended up to “08-October-2026 at 1130 Hrs” instead of existing.

Information (Read-Only)

See Form Under Additional Forms and Documents: **SSGC/SC/PT/EPADS2/14442 Extension-1** (page number: 144)

PUBLIC PROCUREMENT REGULATORY AUTHORITY (PPRA) EPADS

Procurement Forms

PUBLIC PROCUREMENT REGULATORY AUTHORITY
(PPRA)
EPADS

PUBLIC PROCUREMENT REGULATORY AUTHORITY
(PPRA)
EPADS

Additional Forms and Documents

Sui Southern Gas Company Limited

Checklist for Bidders

Enquiry #: 144142 Opening Date: _____

Time: _____ M/s, _____

Please ensure before submitting the bid, that following information/ Documents have been submitted / providing along the bid. Kindly Check ( ) appropriate box.

Sr. No.	Checklist Item	Action Required	(Yes/ No)
1	Tender Document Availability on SSGC website & EPADS	Ensure the bidder participates via EPADS.	
		Download the tender document from EPADS.	
		Fill the BOQ/ Bid Form/ Schedule of Requirement correctly.	
		Submit the bid on EPADS before the deadline; otherwise, bid will be rejected.	
2	Physical Bid Bond Submission	Submit the physical bid bond to the Tender Room (SSGC HO) before the bid submission. And upload Scanned copy of Bid bond on EPADS.	
		If Bid Bond in original not submitted, the bid will be rejected.	
3	Bid Submission Deadline	Confirm all documents (electronic and bid bond in original) are submitted before the specified bid submission deadline.	
4	Signature and Stamp	Ensure all documents are signed and stamped as required and uploaded on EPADS or else bid will be rejected	
5	Additional Documents (if any)	Verify if any other documents specified in Tender document are included in the bid on EPADS	
6	Tender Fees	Rs. 0 (Free)	
7	Technical literature	Original Technical literature is enclosed, if any duly signed & stamped	
8	Any change in your current address, Phone Fax no & Email etc. intimated	Bidders are required to intimate Procurement dept. for any change in Current address, email, contact information etc. in tender documents	
9	Bid validity	Bid Validity as specified is mentioned	
10	Delivery / Completion period	Delivery / Completion period has been specified as per tender terms	
11	Corrections/Cutting/Overwriting	All corrections/cutting/overwriting are singed & stamped	
12	Sample	Sample (if necessary) is enclosed as per form attached in Tender Document	
13	Form-X	Form- X Duly Signed & Stamped	

Note:

Non-Availability of the above information/documents, or incomplete/incorrect statement on this checklist may result in rejection of the bid at / after the bid opening.

As per SRO296(1)/2023 dated 08th March 2023 "E-Pak Procurement Regulations, 2023" all bidders are advised to register in e-Pak Acquisition and Disposal System (EPADS).

Sui Southern Gas Co. Ltd. Procurement Dept. H.O. Gulshan-e-Iqbal

Bidders Authorized Representative

Sui Southern Gas Company Limited

Ref. No. SSGC / SC / 14442
Date: September - 11, 2026

M/s. _____

_____

RENOVATION WORKS OF CP STATIONS NOS . 16

Supplier must be active in FBR Active Taxpayer List (ATL)

Under Single Stage Two Envelope Bidding Procedure

(Under the Clause # 36(a) of PPRA Rules 2004)

Tender Enquiry No. SSGC/SC/PT/EPADS2/14442

SECTION - I

Invitation to Bid

Sui Southern Gas Company Limited (SSGC) intends to carry out the work related *Civil Works Renovation Works of CP Stations (16 Nos.) & Guard Rooms (02 Nos.) and New Construction of Care Taker Room (02 nos.) at Different Locations In Hq-3, Hyderabad Section (As Per BOQ/Criteria) (Under Single Stage Two Envelope Bidding Procedure) (Having Valid PEC Certificate Category C-6 or above with sub-category CE-10) (On Complete Package Basis).*

The Company invites you to submit Technical Proposal and Financial Proposal in two separate sealed envelopes **"Under Single Stage Two Envelope Bidding Procedure"** i.e. Sealed Technical offer & Sealed Financial offers shall be submitted in separate envelopes. Technical offers will be opened and evaluated first. Financial offers of only technically compliant bidders will be opened on later intimated date in presence of bidder's representative.

The priced bids shall be submitted along with FIXED Bid Bond Rs.1,58,500 (One Hundred Fifty-Eight Thousand Five Hundred Rupees Only) in the form of Pay order / Demand Draft in favor of Sui Southern Gas Company Limited. No bid shall be entertained without bid bond / earnest money.

The Company reserves the right to add, delete from or amend any part of these tender documents during the bidding period and bidders shall be informed accordingly.
Bids not conforming to the terms and conditions or a part there of stipulated in these tender documents may be rejected.

The Tender documents comprise the following:

Technical Proposal

Section – I	Invitation to Bid
Section – II	Instructions to Bidders (A&B)/ Instruction to Applicant
Section – III	Scope of Work/Special Conditions of Contact/Evaluation Criteria /with Forms
Section – IV	Special Conditions of Tender Document
Section – V	General Terms & Conditions

Sui Southern Gas Co. Ltd. Procurement Dept. Gulshan-e-Iqbal

Financial Proposal

Section – VI	Tender Form
Section – VII	Bill of Quantity (BOQ)/Bid Form
Section – VIII	Bid Bond Format/Performance Bond /Format of Declaration/Contract Form/Form X/Annexure I/ Form of Bid Securing Declaration
Section – IX/X	Blacklisting Mechanism/ Affidavit of Compliance with IMS Manual /SSTW-05/Drawings

Bids will be submitted online on EPADS Portal on or before **29-09-2026 at 1130** hours. The bids will be publicly opened at **1200** hours on same day online on EPADS in the presence of bidders and / or their authorized agents who may wish to attend.

Bids not conforming to the conditions stipulated in the tender documents may be rejected.

The Company reserves the right to add, delete or amend any part of the tender documents during the bidding period and bidders shall be informed of the same.

The Company reserves the right to reject any or all offers without assigning any reason.

The Company will appreciate confirmation by fax, addressed to General Manager (Procurement), Fax No. 99231583 of your intention to submit the bid.

The advertisement is also published in PPRA (www.ppra.org.net) & SSGC (www.ssgc.com.pk) websites respectively.

For **General Manager (Procurement)**

Sui Southern Gas Co. Ltd. Procurement Dept. H.O. Gulshan-e-Iqbal

TECHNICAL PROPOSAL

Sui Southern Gas Co. Ltd.
Procurement Dept.
H.O. Gulshan-e-Iqbal

PUBLIC PROCUREMENT REGULATORY AUTHORITY (PPRA) EPADS

SECTION - II

INSTRUCTIONS TO BIDDERS

Sui Southern Gas Co. Ltd.
Procurement Dept.
H.O. Gulshan-e-Iqbal

SECTION – II

Instructions to Bidders

1. All rates quoted in the prescribed SOR / BOQ shall be firm, irrevocable and not subject to change or escalation on any account what so ever. No modification, alteration or deletion in the bid will be accepted after the bid opening time.
2. Sealed Bids shall be received at Company's Head Office, ST-4/B, Block - 14, Sir Shah Suleman Road, Gulshan-e-Iqbal, Karachi, up to specified time & date and will be opened publicly at specified time & date, in the presence of Bidders or their authorized representative who choose to attend. In case the bid opening date falls on a holiday or due to some unavoidable circumstances, it is not possible to open on scheduled date, it will be opened on next working day at the same time.
3. All original bid documents accompanied with the bid bond shall be submitted by the Bidder in the envelope provided with tender documents. The sealed Bids must be submitted at the address stated above in person or by courier or by any other means but it shall be the Bidder's responsibility to ensure that Bids so submitted are delivered to the above address before the specified Bid opening date and time. The Company shall not be held responsible in any way for late receipt of Bids or their confidentiality. Bids received after the Bid closing time shall not be considered, and will be returned to the Bidder unopened.
4. In Case of single stage two envelop bidding system (if mentioned in press advertisement & Tender document), sealed technical offer & sealed bid shall be submitted in separate envelops (bid bond will be enclosed with "Financial" bid unless and until specified separately in tender terms). "Technical" and "Financial" is to be mentioned on the top of the envelop. Technical offers will be opened and evaluated first. Financial offer of only technically complaint bidders will be opened at a later intimated date in presence of bidder's representative. Financial offers of technically non-complaint bidders will be returned un-opened along with their bid bond.
5. The Bid should be signed by a person having the authority for this purpose. In case of a bid submitted by a corporate entity, the same shall bear its seal and be duly signed by its secretary.
6. Bids shall be submitted strictly in accordance with the requirements of the Tender Documents and as per specifications.
7. Bid shall remain valid for acceptance for a period of (120) days from the date of public opening of the bids.
8. The Company shall not reimburse any expenses incurred in preparation of Bids.
9. The Bid and all subsequent correspondence shall be in the English language.
10. Payment for the Contracted Work / Services will be made in Pakistani Rupees only. The rates quoted by the Bidder shall therefore, be in Pakistani Rupees.
11. In case of any queries / clarification with regard to this Tender, the same may be forwarded to Procurement Department upto 5 days before the bid opening date, thereafter the request will not be considered.
12. The Company reserves the right to reject any or all Bids without assigning any reason and cancel the bidding process. Company also reserves the right to accept the whole or a part of Bid and does not bind itself to accept the lowest or any particular Bid.
13. In case of any conflict between the Special Terms & Conditions and elsewhere in the tender documents the Special Term & Conditions, will supersede & prevail.
14. Each and every page of the bid documents being submitted by the bidders shall be singed and stamped failing which the bid may be liable for rejection.
15. All documentary evidence required for evaluation of bid should be submitted along with the bid in absence of any documentary evidence no marks will be awarded in accordance to the evaluation criteria.
16. In order to maintain cordial business relation and as per ethical business approach, please provide the justification in case of your non participation on our Fax # 99231583 & Email. mmte@ssgc.com.pk.
17. Conditional Bid will not be accepted and liable to be rejected.
18. The quoted unit price and corresponding total amount shall be inclusive of all duties and Taxes and excluding provincial Sales Tax as per provincial laws.
19. Sealed bids shall be mailed/submitted/dropped in tender box placed at Tender Room, CRD Building, SSGC Head Office. Bids are to be delivered on or before closing time after which bid will not be entertained. In case bid is sent through courier, the same shall be delivered at least half an hour before scheduled opening time.
20. Price given in the Bid Form/BOQ is firm which shall take into account all relevant factors including discount, if any. Discount / escalation given separately at the time of bid opening will not be considered.
21. The bidders are required to fill form SSTW-05 (if deemed required) and submit with the bid.

Sui Southern Gas Co. Ltd. Procurement Dept. H.O. Gulshan-e-Iqbal

SECTION –I

INSTRUCTIONS TO APPLICANTS

1. Technical Qualification Application(s) (FORM-1: LETTER OF APPLICATION) shall be submitted along with forms duly filled/completed in a sealed envelope as per requirement and sent by registered post / courier or delivered in person at the address mentioned in the subject form.

2. All the information shall be filled-in/submitted strictly as per "Forms" enclosed. If necessary, additional photocopies of the "Forms" may be made. Each page of each form should be clearly marked on the top right corner as follows:

   Page 1 of Form I
   Page 2 of Form I.....; etc.

3. Some forms will require attachments (documentary evidence, etc.). Such attachments should be clearly marked as follows: -

   Attachment 1 of Form I
   Attachment 2 of Form I.....; etc.

   In case the attachments where required, are not enclosed with the applications, no credit/points will be given for that particular item.

4. Each sheet shall be duly stamped & signed by the applicant(s) or a person or persons duly authorized to sign on behalf of the applicant(s).

5. All documents submitted by the applicants shall be treated as confidential and will not be returned.

6. Documents received after the due date will not be considered and will be returned un-attended. The name and mailing address of the applicants shall also be mentioned on the envelopes so that the application can be returned unopened.

7. SSGC will only inform the successful/qualified applicants of the result of their application. SSGC reserves the right to reject or accept any application and to annul the technical qualification process and reject all applications, without thereby incurring any liability to the affected applicants or any obligation to inform the applicants of the grounds for the action of SSGC.

8. The technical qualification Questionnaire contains forms as follows:

Form-I:	Letter of Application
Form-II:	General Information
Form-III:	Details of Completed Similar Type Of Construction Projects/Works During Last Eight (08) Years
Form-IV:	Details of Permanent Key Staff with the Firm/Contractor
Form-V:	Details of Relevant Equipment/Tools/Machinery owned by the Firm
Form-VI:	Registration/Office facilities
Form-VII	Financial Stability

All the information shall be submitted strictly in accordance with the above formats/forms. Company brochures, etc. could be forwarded as supplementary but will not be entertained in lieu of the prescribed formats.

Sui Southern Gas Co. Ltd. Procurement Dept. H.O. Gulshan-e-Iqbal

EVALUATION OF APPLICATION FOR TECHNICAL QUALIFICATION

1. The firm/contractor must submit a valid PEC registration for the last fiscal year (2025-26).
2. SSGC may request additional information, or documents in support of information submitted by the firm/contractor.
3. The decision of SSGC to accept or reject any application for technical qualification will be final.
4. The firm desiring to be technically qualified must have suitable machinery & equipment and qualified experienced manpower to handle the subject project.
5. Application for technical qualification of each applicant will be compared with a predetermined set of values and Minimum Qualifying marks = 65.

Sui Southern Gas Co. Ltd. Procurement Dept. H.O. Gulshan-e-Iqbal

PUBLIC PROCUREMENT REGULATORY AUTHORITY (PPRA) EPADS

FORM-I: LETTER OF APPLICATION

Registered Business Name: _____
Registered Business Address: _____
Telephone: _____
Fax: _____

General Manager (Procurement)
Procurement Department,
Sui Southern Gas Company Limited,
Sir Shah Suleman Road,
Gulshan-e-Iqbal
Karachi-75300

Sui Southern Gas Company Limited

Renovation Works of CP Stations (16 Nos.) & Guard Rooms (02 Nos.) and New Construction of Care Taker Rooms (02 Nos.) at different locations in HQ-3 Hyderabad Section

Tender Ref No. CIV-CC-P&C-2K2628

1. We hereby apply to be qualified with Sui Southern Gas Company Limited; as Engineering Firms/Contractors for execution of the above-mentioned work.

2. We authorize SSGC or its authorized representative to conduct any investigation to verify the statements, documents and information's submitted and to clarify the financial and technical aspects of this application from any person, bank, department, agency or firm.

3. The names and positions of contact persons who may be contacted for further information's, if required, are as follows:

a) _____
b) _____
c) _____

4. We declare that;

(An affidavit on Judicial / Stamp Paper of Rs. 50/- will be submitted giving the followings)

i) The statements made and the information provided in the application are complete, true and correct in every respect.
ii) This firm has never been black listed by any Government department, Semi government Authority or Private Company or Corporation and not involved in litigation/arbitration with any client. (In case of any involvement in litigation/ arbitration, details should be furnished)

Respectfully,
(Authorized representative of applicant)
Date : _____

Sui Southern Gas Co. Ltd. Procurement Dept. H.O. Gulshan-e-Iqbal

Sui Southern Gas Company Limited **Ref. No. CIV-CC-P&C-2K2628**

FORM-II: GENERAL INFORMATION

Company Name : _____

_____

1. Head Office Address: _____

   Telephone No. _____

   Fax No. _____

   E-mail: _____

2. Karachi Office Address: _____

   Telephone No. _____

   Fax No. _____

   E-mail: _____

3. Year incorporated: _____

Note: Documentary evidence (where required) is mandatory requirement and to be submitted with the bid else no marks will be awarded.

- Attach copy of certificate of registration and ownership
- State whether office premises used solely by applicant. If shared give names of other firms.

SUI SOUTHERN GAS CO. LTD.

Sui Southern Gas Co. Ltd. Procurement Dept. H.O. Gulshan-e-Iqbal

PUBLIC PROCUREMENT REGULATORY AUTHORITY (PPRA) EPADS

FORM-III: DETAILS OF COMPLETED SIMILAR TYPE OF CONSTRUCTION PROJECTS / WORKS IN THE LAST EIGHT (08) YEARS

Name of Work : _____

Scope & Details of Work : _____

Total Value of Project : _____

Value of work being executed by the applicant: _____

Name of Client : _____

Address of Client : _____

Telephone of Client : _____

Date of Award of Work : _____

Start Date : _____

Scheduled Completion Date : _____

Actual Completion Date: _____

Note:

- **All the information provided shall be supported with documentary evidence otherwise no credit / points will be given. Required attachments (documentary evidence etc.) should be clearly marked as Attachment 1 to Page of Form-III or Attachment 2 to Page ... of Form-III**
- **Please fill one form for each work/project**

SUI SOUTHERN GAS CO. LTD.

Sui Southern Gas Co. Ltd. Procurement Dept. H.O. Gulshan-e-Iqbal

PUBLIC PROCUREMENT REGULATORY AUTHORITY (PPRA) EPADS

FORM-IV: **DETAILS OF PERMANENT KEY STAFF WITH THE FIRM/CONTRACTOR**

Name	Designation	Education/ Qualification	Years of Experience	Date of Appointment with Applicant	Present Designation with Applicant	College/University Last Attended

Note:

- Resume (CV) along with registration of PEC (in case of Engineer) / certificate from Board of technical education (in case of DAE) shall be enclosed; otherwise no credit/points will be given.
- Documentary evidence (where required) is mandatory requirement and to be submitted with the bid else no marks will be awarded.

SUI SOUTHERN GAS CO. LTD.

Sui Southern Gas Co. Ltd. Procurement Dept. H.O. Gulshan-e-Iqbal

FORM-V: **DETAILS OF RELEVANT EQUIPMENT/ MACHINERY / TOOLS OWNED BY THE FIRM/ CONTRACTOR**

Sr. No.	Description	Nos. of Each	Owned Or Leased	Year of Purchase	Capacity/ Performance / Size	Present Location

Note: The bidder has to provide undertaking that the above equipment will be made available at project site within the mobilization period. The information provided shall be supported with documentary evidence where required, otherwise no credit/points will be given.

Sui Southern Gas Co. Ltd. Procurement Dept. H.O. Gulshan-e-Iqbal

FORM – VI; Registration / Office Facility

Dump yard (Atleast 400 Sft Proof of Ownership) : _____

Computer Facilities (List Items) : _____

Pre-Qualification With Other Organizations: _____

(1) _____

(2) _____

(3) _____

EOBI Registration _____

SUI SOUTHERN GAS CO. LTD.

Sui Southern Gas Co. Ltd. Procurement Dept. H.O. Gulshan-e-Iqbal

PUBLIC PROCUREMENT REGULATORY AUTHORITY (PPRA) EPADS

FORM – VII: Financial Stability

Firm/Contractor applying for technical qualification shall submit the following certificates / registration / statements.

D. Financial Stability

- Attachment of Last Fiscal Year Turnover
- Attachment with details of Cash in hand

Firm/Contractor applying for technical qualification shall also submit the following certificates / registration / statements.

a) Banker's Certificate

A confidential current Banker's reference/certificate in respect of bidder's financial soundness to be submitted directly by the bank to SSGC in a sealed envelope. If more than one banker, reference/ certificate from each is required.

b) Audit Report for the last **three (03) years** from Government Registered Reputed Audit Firms.

c) Income Tax assessment for last (03) three financial years and/or Income Tax Clearance Certificate.

Note: In order to be eligible for assignment of marks, Documentary evidence needs to be attached.

Sui Southern Gas Co. Ltd. Procurement Dept. H.O. Gulshan-e-Iqbal

SECTION-II

INSTRUCTIONS TO BIDDERS

1. Escalation

It may be clearly understood that this tender does not contain a price variation clause and, therefore, all unit prices quoted shall be firm and irrevocable and shall not be subject to escalation on any account, whatsoever.

2. Bid Instructions

The bid shall be prepared in accordance with the following instructions:

2.1 Examination

Bidders shall visit/inspect the Work sites and shall fully acquaint themselves with the nature and requirements of Work, form and nature of sites, access to sites, availability of materials, weather, law and order and local conditions etc. before submitting their bids. **Submission of the bid shall be prima facie evidence that the Bidders have fulfilled this requirement.**

2.2 Clarifications

Each Bidder shall be deemed to have satisfied himself before submitting as to the correctness and sufficiency of its tender/offer and the rates quoted, which rates shall, cover all its obligations under the Contract and all matters and things necessary for proper completion and maintenance of the Work. The Bidder may submit questions/queries regarding these documents to the Company in writing within a period extending up to 10 (ten) days after issuance of the tender enquiry. Replies shall be issued to all Bidders in writing and will be on record as addenda to the ensuing Contract. The Company will not be responsible for verbal clarifications. The bid submission time will however not be extended on this account.

2.3 Validity

Bids shall remain valid for acceptance for a period of **One Hundred Twenty (120) days** from the date of bid opening. If the last date falls on a holiday, the validity will be extended to the first Company working day thereafter.

2.4 Cost of Preparation of Bid

Bidders will not be reimbursed for costs of any kind, whatsoever, incurred by them in connection with the preparation and the submission of their bids.

2.5 Bill of Quantities and Rates

The quantities specified in the Bill of Quantities (BOQ) are estimated and are intended to serve only as a guide to the Bidders. Payments shall be made on the basis of actual work quantum as measured. No claims shall be entertained on account of increase or decrease in the scope of work. The Bidders shall ensure that their bids are not front-end loaded, which may lead to rejection of their bids. The bidder shall quote the rates on Section-VIII, Bill of Quantities of the tender document. Rates quoted on other form will be rejected.

2.6 Sub-Contracting

The Bidder shall include a list of works which he intends to sub-let to sub-contractors. Sub-contractors proposed by the Bidder are subject to Company's approval.

Sui Southern Gas Co. Ltd. Procurement Dept. H.O. Gulshan-e-Iqbal

2.7 Bid Documents

Bidders shall note that the tender documents including plans, drawing and specifications, furnished for tendering purposes are not to be used for any purpose other than bidding on this specific job and shall not be reproduced without the written permission of the Company. All such documents issued for tendering shall be returned with the bid duly stamped.

2.8 Organization Chart

An Organization chart proposed for the conduct of the Work shall be submitted with the bid. The chart shall clearly show permanent members of the Bidders supervisory staff that the Bidder proposes to deploy on the work sites for the performance of the Work.

2.9 List of Equipment

The Bidder shall submit with the bid, a complete list of equipment proposed to be used in carrying out the Work including make and type of all such equipment.

2.10 Time Schedule

The Bidder shall submit with his bid, a detailed work programme in the form of a bar chart showing planned schedule of various activities required to complete the entire work (as per Scope of Work) within the stipulated completion period by deploying adequate manpower.

2.11 Additions, Deletions and Amendments

The Company reserves the right to add, to delete from and/or amend the work defined in Scope of Work/BOQ as deemed necessary before or after the execution of the contract. All such additions deletions and amendments shall only be authorized in writing by the Company's representative.

2.12 Signing Authority

Bidders shall return all tender documents (including drawings) duly signed on all pages by an authorized representative of the Bidder and shall also carry official stamp of the Bidder's firm.

2.13 Postal Address

The Bidder shall give below office telephone, telex and fax numbers including complete postal address at which correspondence may be sent and all notices may be legally served in connection with his bid and/or ensuing contract with the successful Bidder.

Name of Firm : _____

Telephone Nos : _____

Telex No : _____

Fax No : _____

Address : _____

_____

2.14 Disqualification/Rejection of Bids

Failure to comply with any instruction in the tender documents would render the bid liable to disqualification and rejection.

Sui Southern Gas Co. Ltd. Procurement Dept. H.O. Gulshan-e-Iqbal

2.15 Unit Work Rates Bids

The unit rates quoted by the Bidder shall be workable. The Bidder shall be required to furnish a complete rate analysis of any work item as considered necessary. If the bid of the successful bidder is seriously unbalanced in relation to SSGC estimate of the cost of work to be performed under the contract, SSGC may require the bidder to produce detail price analysis for any or all items of the Bill of Quantities to demonstrate the internal consistency of those prices with the construction method and schedule proposed. After evaluation of price analysis, SSGC may require that the amount of Performance Bond set forth in the tender document be increased at the expense of successful bidder to a level sufficient to protect SSGC against any Financial Loss in the event of default of the successful bidder under the contract.

2.16 Check List

Bidder shall, inter alia, ensure the following before submitting the bid:

- All pages of the bid including drawings have been signed and stamped.
- Bid Bond/Earnest Money for the specified amount has been enclosed.
- List of equipment and detailed work schedule required under Clause 2.9 & 2.10 of Section II, is enclosed.
- Postal address, telephone, telex and fax Nos. (If available have been given in Clause 2.13 of Section II).
- Total amount of Bid has been mentioned in 9c, Section VII, Tender Form.
- Duly authorized representative has signed (along with witness) at the end of Tender Form, Section VII.

SUI SOUTHERN GAS CO. LTD.

Sui Southern Gas Co. Ltd. ★ Procurement Dept. ★ H.O. Gulshan-e-Iqbal

PUBLIC PROCUREMENT REGULATORY AUTHORITY (PPRA) EPADS

SECTION-III

SCOPE OF WORK

Sui Southern Gas Company Limited (SSGC) intends to undertake **Renovation Works of CP Stations (16 Nos.) & Guard Rooms (02 Nos.) and New Construction of Care Taker Rooms (02 Nos.) at different locations in HQ-3 Hyderabad Section.**

The contractor/firm shall supply adequate manpower as well as sufficient machinery and material required for the execution of the Work. The contractor/firm shall ensure safe and proper execution of the work and shall complete the work within the completion period. The detailed scope of work is attached as Section – VIII (A).

All the specified material to be used for construction/modification shall be of first / prime quality (as per specifications described in Bill of Quantities), inferior or No. 2 quality of any material shall be rejected by the Company's representative. The Contractor shall remove such rejected material immediately from site as and when instructed by the Company's representative. Additionally, samples of following material shall be submitted for approval by Company's representative prior to execution of work;

Civil Works:

1. Cement (OP / SR)	Lucky, Thatta, Falcon or Equivalent
2. Kiln Bricks 9" x 4 ½" x 3"	Local 1st class (To be approved by the company)
3. Blocks	First class machine made block (to be approved by the company)
4. Fine Aggregates	To be approved by the company
5. Coarse Aggregate	To be approved by the company
6. Stone Ballast	To be approved by the company
7. Steel Reinforcement	Amreli, Mughal or equivalent
8. Paint	ICI, Berger, Happliac or equivalent.
9. SBR/Waterproofing Chemical	SIKA, FOSPAK, ULTRACHEMICALS or equivalent.

All the above shall be of first/prime quality; inferior or No.2 quality of any material shall be rejected by the Company's representative. The Contractor shall remove such rejected material immediately from site as and when instructed by the Company's representative

Sui Southern Gas Co. Ltd. H.O. Gulshan-e-Iqbal Procurement Dept.

Ghulam Ali Mahar
General Manager
Projects & Construction Deptt.

Section – VIII-A

Renovation Works of CP Stations (16 Nos.) & Guard Rooms (02 Nos.) and New Construction of Care Taker Rooms (02 Nos.) at different locations in HQ-3 Hyderabad Section

Scope of Work

(A) Renovation Works of CP Stations (16 Nos.) & Guard Rooms (02 Nos.)

A1) Roof Screeding

Providing and laying min 2" th. roof screeding in 1:2:4 cement concrete ratio over roof slab with proper slope, finish, curing, complete in all respect as per drawing, BOQ, specifications & site requirements and as directed by Engineer Incharge, comprising of:

(i) Removing old roof screeding upto satisfaction of Engineer Incharge and disposing off to a suitable site outside company premises

(ii) 03 coats of Water Proofing chemical (SBR Sika Seal 105 or equivalent approved by the Company) as specified by the manufacturer

(iii) min 2"th. roof screeding using 1:2:4 machine mix CC in proper slope, panels, finish and curing

A2) Plaster

Providing all materials for making, applying and curing 1/2" and 3/4" thick plaster on inner and outer surfaces of walls (respectively) in 1:4 (1 part cement, 4 parts fine clean sand) cement-sand mortar to all surfaces or where required including vertical/horizontal chamfering splays, jambs, recesses, mouldings, grooves, pattas, edges rebates, expanded metal lath at junctions between structural members & masonary and concrete joints complete in all respect and as directed by the Engineer Incharge. This item also includes removing of existing old damaged/cracked plaster and providing & fixing fly mesh/metal lath on surfaces pre-plastering.

A3) Paint

Providing and applying paint of approved colour and shade of specified make in 3 coats of distemper on all surfaces of walls as shown in drawings complete as per specifications. This item includes preparation of all surfaces to be painted including removing, scraping and cleaning off all old paint from wall surfaces and application of approved wall putty to even wall surfaces as directed by Engineer Incharge

A4) Brick / Block Masonry

Providing and laying first class kiln-burnt brick masonry or block masonary set in 1:3:6 concrete for sub/super-structure works up to any height or depth as shown on drawings in straight or curved sections of walls of 9" thickness (for bricks) and 8" thickness (for blocks) or above including carriage of material, scaffolding & its removal, racking out joints lining, curing etc. complete as per specifications, drawings, Site requirements, instructions and to the entire satisfaction of the Engineer Incharge. Selection of bricks or blocks shall as per availability at site and as instructed by Engineer Incharge.

A5) C.C Flooring

(i) Stone Soling 6" thick (compacted thickness) 3" & downsize, compacted with mechanical compactor under floor or where required including grouting with coarse sand.

(ii) Lean concrete 1:4:8: 4" thick (1 part cement, 4 parts fine clean sand, 8 parts graded crushed stone of 3/4" & down) using S.R. cement

Sui Southern Gas Co. Ltd. H.O. Gulshan-e-Iqbal Procurement Dept.

e-Pak Acquisition and Disposal System (EPADS) generated document | © 2026

(iii) Cement concrete 1:2:4: 2" thick (1 part cement, 2 parts fine clean sand, 4 parts graded crushed stone of 3/4" & down) using S.R. cement (trowel finish) laid in panels, levels gradient (slope), compacting, curing, etc. . .

A6) Repairing M.S Door

Providing all tools, material, equipment and labour for repairing M.S Doors having size upto 3'-0" x 7'-0". This item includes installing new components of existing M.S doors, door locking arrangement, tower bolts, repairing door frame (chokhat) including replacing with new M.S angles, hinges, door M.S Sheet (16 SWG) etc. as and where required and as directed by Engineer Incharge. This item also includes lubrication of hinges and repairing any other damaged door parts to a fully functioning door, 03 coats of Enamel paint over single coat of red-oxide primer, complete in all respect and as directed by Engineer Incharge.

A7) Repairing M.S Louvre vents

Providing all tools, material, equipment and labour for repairing existing M.S louvre vents having sizes upto 8'-0" x 8'-0". This item includes, but not limited to, replacing all damaged components with new including replacing any damaged M.S Sheet/louvres, repairing locks, handles, hinges, grills and applying 03 coats of Enamel paint over single coat of red-oxide primer etc. to a fully functioning M.S Louvre vent, complete in all aspects and as directed by Engineer.

A8) Plinth Protection

Providing all labour, tools, equipment, machinery and material for construction of plinth protection on outer side of rooms as per drawing, comprising of 9" thick Brick Masonry with plaster on exposed surface, 2" thick 1:2:4 machine mix over 4" thick 1:4:8 over 6" thick stone soling complete in all respect as per site requirement, Drawing, BOQ and Specification and as directed by the Engineer Incharge.
This item also includes earthfilling below stone soling to maintain required levels as per Drawing and site conditions.

(B) New Construction of Care Taker Rooms (02 Nos.)

B1) Excavation & Backfilling:

Providing all labour, tools, equipments, machinery and material for excavation & Backfill in all kind of soil for foundations of columns, Plinth Beams or anywhere as required below ground level up to any depth including rock/hard soil and backfilling with the excavated material, dewatering shoring and disposing off all surplus materials outside the site of work to an appropriate location for complete construction of Guard Room as per Drawing, BOQ, Specifications & Site requirements and as directed by the Engineer Incharge.
This item also includes the cost of levelling, grading, removing surplus soil from site and dumping to municipal dumping site outside Company's premises as per the direction of the Engineer Incharge.

Sui Southern Gas Co. Ltd. Procurement Dept. H.O. Gulshan-e-Iqbal

Section – VIII-A

Renovation Works of CP Stations (16 Nos.) & Guard Rooms (02 Nos.) and New Construction of Care Taker Rooms (02 Nos.) at different locations in HQ-3 Hyderabad Section

Scope of Work

B2) Stone Soling:
Providing all labour, tools, equipments, machinery and material for providing, placing and compacting stone soling (3" thick stone size), compacted with mechanical compactor under foundations including grouting with crush stones & coarse sand, Complete in all respect and as per Drawing, BOQ, Specifications & Site requirements and as directed by the Engineer Incharge.

B3) Lean 1:4:8:
Providing all labour, tools, equipments, machinery and material for mixing, forming, placing, compacting, curing and removing formwork in concrete (1:4:8) using S.R Cement in Foundations, or where required, complete in all respect and as per drawing BOQ, Specifications & Site requirements and as directed by the Engineer Incharge.

B4) Cast-in-situ 1:3:6:
Providing all labour, tools, equipments, machinery and material for mixing, forming, placing, compacting, curing and removing formwork in concrete (1:3:6) using S.R Cement below plinth in walls, foundations, or where required, complete in all respect and as per drawing BOQ, Specifications & Site requirements and as directed by the Engineer Incharge.

B5) Concrete 1:2:4:
Providing all labour, tools, equipments, machinery and material for providing, mixing, placing, forming, compacting with mechanical vibrator, curing, and removing formwork in Machine mix 1:2:4 concrete (1 part Cement, 2 Parts Fine Sand, 4 parts Crush Stones) using S.R/O.P Cement in foundations, Beams, Columns, Slabs or where required with steel gurmala finish and approved quality material. Complete in all respects and as per Drawing BOQ, Specifications & Site requirements and as directed by the Engineer Incharge.
Note: Sulphate Resistant Cement should be used in all structures upto Plinth beams.

B6) Steel Reinforcement:
Providing all labour, tools, equipments, machinery and material for providing, cutting, bending, placing and tying steel reinforcement of 60 KSI yield strength deformed bars of specified make, including the cost of binding wire, wastage, over rolling, chairs and spacers in footings, columns, Beams, slabs or wherever required, complete in all respects and as per Drawing BOQ, Specifications & Site requirements and as directed by the Engineer Incharge.

B7) Brick / Block Masonry
Providing and laying first class kiln-burnt brick masonry <u>or</u> block masonary set in 1:3:6 concrete for sub/super-structure works up to any height or depth as shown on drawings in straight or curved sections of walls of 9" thickness (for bricks) and 8" thickness (for blocks) or above including carriage of material, scaffolding & its removal, racking out joints lining, curing etc. complete as per specifications, drawings,

Sui Southern Gas Co. Ltd. Procurement Dept. H.O. Gulshan-e-Iqbal

Ghulam Ali Mallar
General Manager
Projects & Construction Dept

Section – VIII-A

Renovation Works of CP Stations (16 Nos.) & Guard Rooms (02 Nos.) and New Construction of Care Taker Rooms (02 Nos.) at different locations in HQ-3 Hyderabad Section

Scope of Work

Site requirements, instructions and to the entire satisfaction of the Engineer Incharge. Selection of bricks or blocks shall as per availability at site and as instructed by Engineer Incharge.

B8) Plaster:

Providing all labour, tools, equipments, machinery and material for making, applying and curing 3/4" thick Plaster in 1:4 cement-sand mortar to all surfaces of walls, beams, columns, slabs or wherever required, including vertical / horizontal chamfering splays, jambs, recesses, moldings, making rounded coves as shown in details, edges, rebates, grooves, expanded metal lath at junctions between structural members & masonry, complete in all respects and as per Drawing BOQ, Specifications & Site requirements and as directed by the Engineer Incharge.

B9) CC Flooring

Providing all labour, tools, equipments, machinery and material for mixing, placing, laying, compacting and curing for CC flooring in Guard Room comprising of:

a) Earth fill material obtained from approved outside sources for preparation of Flooring or where required. Earth filling shall be carried out in layers not exceeding 1' thickness or as per site requirement, making & maintaining lines, grades, side slopes, cross slopes and crown, breaking clods, watering and consolidation to 95% of the maximum dry density, using mechanical roller. This item also include the cost of all the levelling dressing of existing soil.

b) 6" thick (compacted thickness) stone soling (3" thick stone size), compacted with mechanical compactor under floor or where required, including grouting with coarse sand.

c) 4" thick cement concrete 1:4:8 (1 part cement, 4 parts fine clean sand and 8 parts graded crushed stone of 3/4" & down) using S.R cement.

d) 2" thick machine mix cement concrete 1:2:4 (1 part cement, 2 parts fine clean sand and 4 parts graded crushed stone of 3/4" & down) using S.R cement (trowel finish) laid in 4'-0 x 8'-0 panels using 5mm x 25mm glass strip, levels gradient (slope), compacting, curing, etc.

B10) Roof Screeding with Water proofing:

Providing all labour, tools, equipments, machinery and material for providing & laying Roof Screeding (2" th. min.), complete in all respect as per Drawing, BOQ, Specifications & Site requirements and as directed by the Engineer Incharge, comprising of:

a) 03 coats of company approved water proofing chemical SBR as per supplier specifications

b) Min 2" thick Roof Screeding using 1:2:4 machine mix CC over SBR coating, in proper slope, panels, finish & curing.

B11) Paint:

Providing all labour, tools, equipments, machinery and material for providing, applying and painting 03 coats of vinyl Distemper on ceiling, or wherever required, of specified make and shade including preparation of surface to be painted, complete in all respect and as per Drawing, BOQ, Specifications & Site requirements and as directed by the Engineer Incharge.

Sui Southern Gas Co. Ltd. Procurement Dept. H.O. Gulshan-e-Iqbal

Ghulam Ali Mahar
General Manager
Projects & Construction Dept.

SSGC LTD

Section – VIII-A

Renovation Works of CP Stations (16 Nos.) & Guard Rooms (02 Nos.) and New Construction of Care Taker Rooms (02 Nos.) at different locations in HQ-3 Hyderabad Section

Scope of Work

B12) MS Door:

Providing all labour, tools, equipments, machinery and material for providing and installing single leaf open able hinged type MS door of required sizes (door side angles l"xl"xl/4" & 16 Guage Sheet) with MS angle (l-l/4"xl-l/4"xl/4") Chokat frame with proper locking arrangement on both sides including 03 coats of Oil Paint over single coat of red oxide, complete in all respect and as per Drawing, BOQ, Specifications & Site requirements and as directed by the Engineer Incharge.

B13) MS Window (3'-0" x 3'-0"):

Providing all labour, tools, equipments, machinery and material for providing and installing single leaf open able hinged type MS Window (side angles l-1/4" x l-1/4" x l/4" & 16 Guage Sheet) with MS angle (1-l/4"xl-l/4"xl/4") frame with proper locking arrangement on both sides including 03 coats of Oil Paint over single coat of red oxide, complete in all respect and as per Drawing, BOQ, Specifications & Site requirements and as directed by the Engineer Incharge.

Note: This item also includes the cost of providing and fixing MS grill including 03 coats of Oil Paint over single coat of red oxide on same windows & ventilator as per drawing attached.

Bl4) Plinth Protection:

Providing all labour, tools, equipments, machinery and material for construction of plinth protection on outer side of Guard room as per drawing, comprising of 9" thick Brick Masonry with plaster on exposed surface, 2" thick machine mix over 4" thick 1:4:8 over 6" thick stone soling over 1:2:4 complete in all respect as per site requirement, Drawing, BOQ and Specification and as directed by the Engineer Incharge.

This item also includes earthfilling below stone soling to maintain required levels as per Drawing.

Ghulam Ali Mahar
General Manager
Projects & Construction Deptt.

SUI SOUTHERN GAS CO. LTD.

Sui Southern Gas Co. Ltd. Procurement Dept. H.O. Gulshan-e-Iqbal

e-Pak Acquisition and Disposal System (EPADS) generated document | © 2026

SECTION-IV

SPECIAL CONDITIONS OF CONTRACT

1. Representative of the Company

Representative of the Company for the purpose of this contract would be:

Mr. Ghulam Ali Mahar GM (P&C)

2. Signing of Agreement

Formal signing of agreement shall be completed as soon as possible. However, the firm shall mobilize/commence work after issuance of Letter to Proceed. Formal agreement/contract would be made on stamp paper of value at the rate of Rs. 0.35 per hundred rupees of the value of contract. The stamp duty would be borne by the engineering firm.

3. Completion Period

The entire work shall be completed within **Seven (07) Months** from the issuance of Letter to proceed, which in case of work exigencies could be issued prior to signing of formal agreement.

4. Liquidated Damages

The rate of liquidated damages shall be **0.1% percent** of the final contract value for each day of delay and shall be limited to a maximum of **Ten (10%) percent** of the final contract value.

5. Monthly Deduction

Monthly deduction of **Rs.25,000** per month shall be made in case Contractor/firm fails to deploy agreed / specified full time PEC Registered Civil Engineer.

6. Performance Bond

The performance bond shall be in an amount equal to **Five (05%) percent** of the bid value / contract value and it shall be submitted within **10 days** after issuance of the Letter of Intent before signing of the Agreement/Contract within the stipulated time. The performance bond shall be released after the satisfactory completion of the work and issuance of substantial completion certificate.

7. Security Arrangement at Site

The firm/contractor shall be responsible to arrange all security and safety measures for staff and equipment required during undertaking the detailed engineering survey work & geotechnical investigation.

8. Maintenance Period

The maintenance period will be **Twelve (12) Months** after the issuance of Substantial Completion Certificate by the Company.

9. Retention Money

The retention money shall be equal to **Five (05%)** percent of the certified value of work which would be released after the maintenance period and rectification of punch list defects, to the satisfaction of the Company.

Sui Southern Gas Co. Ltd. Procurement Dept. H.O. Gulshan-e-Iqbal

10. Mode of Payment

The Payment shall be made as per following schedule.

M-1 For Item-wise/Unit price Item of Works:

The payments against Running / Final bill shall be made to the Contractor by the Company as per actual executed quantities at site.

M-2 For Lump-sum Item of Works:

(a) 60% payment of each Care Taker Room on completion of Room upto Roof slab
(b) 100% payment of each Care Taker Room on 100% completion of all works and Handing/Taking over.

11. Disqualification / Blacklisting

The Company reserves the right to implement the clauses as per rules defined in PPRA rules Nos. 18 & 19. The decision in this regard will be firm, final and binding on all bidders.

12. Survey Equipment

The contractor/firm shall provide all the required survey equipment at site. The survey instrument / equipment shall be in good condition and shall be available at site for use by the Company.

13. Quality of Cement

Cement shall be procured from the approved local factories only complying with B.S. 4027. Imported cement shall not be used under any circumstances.

14. Fine Aggregate / Coarse Aggregates (Complying with BS 882)

i) Approved quality of sand shall be used as fine aggregates.

ii) Well graded crush stone (3/4" and down) of approved quality shall be used as coarse aggregates.

15. Water and Electricity

Water & electricity requirement for all purposes shall be arranged by the firm/ contractor. Only sweet water complying with ASTM-D 596 shall be used for construction works.

16. Quality of Material, Workmanship and Tests

All material and workmanship shall be of respective kinds described in the contract (drawings, sketches/BOQ/specifications/scope of works, etc.) and in accordance with the Company instructions and shall be subjected to tests from time to time as the Company may direct. **There will be no compromise on the quality of workmanship or material.** The firm/contractor shall provide such assistance, instruments, machines, labor and materials as are required for examining, measuring and testing any work and the quality, weight or quantity of any material used. The Contractor/firm shall supply samples of materials before incorporation in the work for testing and/or approval as may be selected and required by the Company. All samples shall be supplied by the Contractor/firm at his own cost and the cost of carrying out all such tests shall also be borne by the Contractor/firm.

In order to ensure quality of construction the Company (besides carrying out other tests as required under the contract) may carry out chemical tests to find out the ratio of cement and aggregate for the mortar or concrete used in the work. This shall also be at Firm/ Contractor's cost.

17. Damage to Property and Persons

The firm/contractor shall, except if and so far as the Contract provides otherwise, indemnify and keep indemnified the Company against all losses and claims for injuries or damage to any persons or property whatsoever arise out of or in connection with or in consequence of the construction and maintenance of the works and against all claims demands, proceedings, damages, costs, charges and expenses whatsoever in respect of or in relation hereto.

Sui Southern Gas Co. Ltd. Procurement Dept. H.O Gulshan-e-Iqbal

18. Site Visit

The bidders are advised to visit and examine the Site of Works and its surroundings and obtain for themselves on their own responsibility all information that may be necessary to get clarity regarding scope of work/ BOQ for preparing the bid and entering into a contract for construction of the subject works. All cost in this respect shall be at the bidder's own expense.

19. Health Safety Environment (HSE)

The firm/Contractor will follow the Health, Safety & Environmental conditions as mentioned in Section-X "HSE Manual". The Firm/Contractor shall also deploy a full time qualified and experience safety manager for strict compliance to company's HSE policy. To ensure the safety of workers, utmost care shall be taken while cementing broken glass and installing razor wires onto the boundary walls.

20. Pre-Bid Meeting

A pre-bid meeting will be held at SSGC Head Office. The venue, date and timing of the meeting will be notified by SSGC in due course of time. The Bidders are advised to attend the pre-bid meeting and obtain clarifications and information necessary for preparation of bid document. All prospective bidders or their authorized representatives shall be invited to attend such a pre-bid meeting.

21. Issuance of Revise Letter to Proceed (LTP)

If the site will not be handed over to contractor/firm due to site clearance after issuance of Letter to Proceed (LTP), then revise LTP will be issued to the contractor/firm.

22. Provision of Mobile Phone Facility

The firm/contractor will provide mobile smartphone facility to their supervisor at construction site in order to maintain 24 hours contact with company's representative during the execution course of project, including providing site pictures as and when requested.

23. Lighting Work at Night

In the event of work being carried out at night, the Contractor/firm shall at their own cost, provide and make arrangements for electric power supply for maintaining such good and sufficient light for carrying out the work satisfactorily without danger. All arrangements adopted for such lighting shall be to the satisfaction of the Company's Representative.

NOTE:

- **In case of any conflict between Special Conditions & General Conditions of the contract, the Special Conditions of the contract will govern.**

Sui Southern Gas Co. Ltd. Procurement Dept. H.O. Gulshan-e-Iqbal

SECTION –I-B

Technical Qualification of Construction Firms / Contractors

Renovation Works of CP Stations (16 Nos.) & Guard Rooms (02 Nos.) and New Construction of Care Taker Rooms (02 Nos.) at different locations in HQ-3 Hyderabad Section

Tender Reference No. CIV-CC-P&C-2K2628

MANDATORY REQUIREMENTS
a) Registration with PEC for category C-6 and above having sub category CE-10
b) Registration with Sindh Board of Revenue (SBR)
c) Banker's Confidential Certificate, direct from Bank (not older than last 3 months from date of bid submission)
d) Income Tax Assessment Order or Income Tax Clearance Certificate (**Last Three Years**).
e) Audit Report for the last **three (03) years** from Government Registered Reputed Audit Firm.

Evaluation Criteria for Technical Qualification

S.No.	CRITERION	OVERALL (Max Marks)
1	Firm's Experience	50
2	Technical Staff	10
3	Instrument / Equipment & Tools Owned / Rented by the Firm	10
4	Registration/Office Facilities	05
5	Financial Stability	25
	Total Numbers	**100**

For the purpose of quantitative evaluation, the above five criteria have been further sub-divided as under:

	CRITERION	OVERALL (Max Marks)
1	Firm's Experience	50
	Relevant Experience of Firms with Similar Works/Projects of Last 08 Years	
i)	7.5 marks for each work more than Rs. 05 million. (Max 2 Projects)	15
ii)	05 marks for each work more than Rs. 04 million. (Max 3 Projects)	15
iii)	03 marks for each work more than Rs. 03 million. (Max 4 Projects)	12
iv)	02 marks for each work more than Rs. 02 million. (Max 4 Projects)	08

	CRITERION	OVERALL (Max Marks)
2	Technical Staff	10
i)	Project Engineer (Min B.E / B.Sc. (Civil Engineers) registered with PEC (Experience more than 05 years) (3 marks each)	03
ii)	Site Engineer (Min B.E / B.Sc. (Civil Engineers) registered with PEC (Experience more than 03 years) (2 marks each)	02
iii)	Associate Civil Engineers/ D.A.E (Civil) (Experience more than 3 years) (2 marks each)	02
iv)	Surveyor (Min DAE Civil) (Experience more than 3 years) (2 marks each)	02
v)	Accountant / Computer Operator / Clerk Staff (1 mark each)	01

Sui Southern Gas Co. Ltd. Procurement Dept. HQ Gulshan-e-Iqbal

Ghulam Ali Mahar
General Manager
Projects & Construction Dept.

SUI SOUTHERN GAS CO. LTD.

	CRITERION	OVERALL (Max Marks)
4	Equipment Availability (Owned/Rented/On The Hand)	10
i)	Excavator (Hydraulic/Backhoe) (2 marks each)	02
ii)	Vibrator Roller Compactor (1 marks each)	01
iii)	Wheel barrow (1 marks each)	01
iv)	Mixer Machine (1 marks each)	01
v)	Bulldozer (1 marks each)	01
vi)	Dump Truck (1 mark each)	01
vii)	Water Tanker (1 mark each)	01
viii)	Plate Compactor (1 mark each)	01
ix)	Transport Vehicles (1 mark each)	01

	CRITERION	OVERALL (Max Marks)
5	Facilities Available	05
i)	Office Facility in Karachi (1.5 marks each)	1.5
ii)	Porta Cabin (Detail with proof of ownership / Rent) (1.5 marks each)	1.5
iii)	Computers (1 mark each)	01
iv)	Landline Telephone/Mobile Facility (0.5 mark each)	0.5
v)	Email Facility (0.5 mark each)	0.5

	CRITERION	OVERALL (Max Marks)
6	Financial Stability	25
6.1	Annual Turnover for Last Year (Each Year)	
i)	Annual Turnover above PKR 10 Million	15
ii)	Annual Turnover between PKR 08 to 10 Million	10
iii)	Annual Turnover between PKR 06 to 08 Million	07
iv)	Annual Turnover between PKR 04 to 06 Million	03
6.2	Cash in Hand / Bank	
i)	Cash in Hand/Bank above PKR 07 Million	10
ii)	Cash in Hand/Bank between PKR 05 to 07 Million	07
iii)	Cash in Hand/Bank between PKR 03 to 05 Million	05
iv)	Cash in Hand/Bank between PKR 01 to 03 Million	03

Note:

1. Minimum Qualifying marks = 65
2. Documentary evidence against each field of marking criteria may be verifiable without which marks will not be awarded.
3. CVs/Resumes and PEC certificate of Engineer must be provided else no marks will be awarded.
4. Contractor must provide affidavit that all rented / owned equipment and tools will be readily available at site as per instruction of engineer incharge.

Sui Southern Gas Co. Procurement Dept. H.O. Gulshan-e-Iqbal

Manager Procurement Dept.

CE (P&C)

Section -
Special Conditions of Tender Document
Tender Enquiry No. SSGC/SC/

Note: In case of any conflict between special conditions of Tender Document and any other terms & conditions, the Special Conditions of Tender Document will govern / prevail.

1- Contractor to submit the following within 15 days after issuance of Letter of Intent (LOI).
   a. Performance Bank Guarantee
   b. Stamp Papers
   c. Insurance Policy
   d. Any other Document as mentioned in the LOI

2- Formal contract will be made on Non-Judicial stamp paper of value @ Rs 0.35 per hundred rupees of contract value, as per prevailing rate by Government of Sindh & Balochistan. The stamp duty will be borne by the contractor and also submit the copy of challan of stamp paper. **Further as per Government of Sindh Board of Revenue notification NO.CIS/SWB/BOR/R&T-17/2022-808 dated 08-06-2022 all judicial and non-judicial stamp paper of the denomination of rupee five hundred and above shall be exclusively on e-stamp.**

3- All kinds of Government Taxes, Duties and Levies against any item of the contract, shall entirely be the responsibility of the Contractor. Income Tax will be deducted as per applicable Law under the prevailing Government Rules. Rate of Income Tax deduction in relation to submission of Income Tax certificate from the Contractor should also be stipulated.

4- Bank Guarantee (Bid Bond Guarantee/Performance Bank Guarantee) will be made on Non-Judicial stamp paper at the prevailing rate as specified by the respective Provinces. Further the bidder/contractor submitting the Bid Bond guarantee/Performance Bank guarantee being prepared by the State Bank's schedule banks should ensure that there should be no deletion/insertion/alteration/modification of any terms in the Bid Bond/PBG guarantee format as given in the tender document or else bid will be liable for rejection.

5- If the letter to proceed (LTP)by user deptt. is not issued within six months after issuance of letter of intent (LOI), both the parties are at liberty to terminate/revoke the LOI without any claim of loss or damage to the other party.

6- The completion period of the said work shall start with effect from the issuance of Letter to Proceed, which in case of work exigencies could be issued prior to signing of formal agreement.

7- In case of services and works tenders:
   Bids determined to be substantially responsive will be checked by the Procuring Agency for an arithmetic error. Errors will be corrected by the Procuring Agency as follows;
   a. Where there is a discrepancy between the amounts in figures and in words, the amount in words will govern ; and
   b. Where there is a discrepancy between the unit rate and the line item total resulting from multiplying the unit rate by the quantity, the unit rates as quoted will govern, unless in the opinion of the Procuring Agency there is an obviously gross misplacement of the decimal point in the unit rate, in which case the line item total as quoted will govern and the unit rate will be corrected.

8- The bidder shall fill in rates and prices for all items of the works / services described in the BOQ. Item against which no rate or price is entered by a bidder will not be paid for by the Procuring Agency when executed and shall be deemed covered by rates and prices for other items in the BOQ. **Any Bidder who change / amend the BOQ or Price Schedule (description, Quantity, UOM etc.) will render the bid as conditional bid and will be liable for rejection.**

9- **Method For Submission of Bid Bond (Under Single Stage Two Envelope Bidding Procedure):**
   In case of Single Stage Two Envelope Tenders the fixed bid bond as per clause#09 of General Terms & Conditions to be placed in the Technical Proposal. However, if the bid bond is placed in the financial proposal will also be considered. Without submission of bid bond (either in Technical proposal or financial proposal) the bid will be rejected.

10- Bid bond submission (2%) of the bid amount as mentioned in the clause 9 of General Terms & Conditions, to be treated as null & void, however other contents of clause 9 will remain unchanged. The submission of fixed amount of Bid security is appearing in the Schedule of Requirement/Bid Form.

Sui Southern Gas Co. Ltd. Procurement Dept. H.O. Gulshan-e-Iqbal

e-Pak Acquisition and Disposal System (EPADS) generated document | © 2026

a) All the bidders are advised to furnish fixed bid security (Original Instrument) as per amount appearing in Schedule of Requirement/Bid Form, failing which their bid will be rejected.
b) The submission of fixed amount of bid security is also mandatory for all the bids valuing Rs.500,000/- or less.
c) The word lowest bidder or the lowest evaluated bid has been substituted to read as **most advantageous bid.**

11- Bid shall remain valid for acceptance for period of (120) days from the date of public opening of the bids & Bid Bond validity is for 150 days.

12- In case the local agent requires to offer bid form more than one Principal / Manufacturer, it is mandatory to purchase separate tender document for each Principal / Manufacturer, failing which the bid submitted with the original tender document will only be accepted and the bid with photocopy of tender document will be rejected.

13- ***Blacklisting Mechanism of Suppliers and Contractors and their Local Agent:***
Black listing mechanism is attached separately in the tender documents which will become an integral part of Tender Documents and now be followed / enforced in true letter & sprit and **supersede the Black listing terms as mentioned in the General Terms & Conditions.**

14- Original counter slip of token which is issued with tender document to be attached on the TOP of envelope at the time of bid submission"

15- The **Successful** Contractor(s) / Supplier(s) / Consultant(s) shall submit a copy of Professional Tax Certificate with their Invoices / Bills failing which the payment will not be released.

16- ***Contracts of Contractors***
In the event the contractor is not willing to extend the CONTRACT for further term(s) / Period(s) under the same terms & conditions and the quoted price as defined in the bid documents, the contractor is liable to intimate in writing to SSGC at-least 3 (Three) months in advance prior to completion of the existing contract term / period, failing which, action will be taken as per tender terms.

17- **Insurance**
In addition to the Clause 22 –**Insurance,** of General Term and Condition, when The **Successful** Contractor(s) / Supplier(s) will submit Insurance Policy to SSGC, the Insurance Company (policy issuer) should be registered with SECP, otherwise the insurance policy will not be considered / rejected at contractor's risk and cost. The insurance coverage period will be according to the work completion period as mentioned in the contract / tender documents.

18- ***Fixed Bid Security – Alternative Bid***
A bidder cannot submit two bids/offers with a single fixed bid security/pay order. However, the alternative bids/offers with separate fixed bid security/pay order can be accepted, failing which the bids will be liable for rejection.

19- ***Bid Bond & PBG (Performance Bank Guarantee) for Proprietary Tenders***
In case of proprietary Tenders, the Bid Bond & Performance Bank Guarantee (PBG) are not required / Applicable.

20- SSGC will not pay invoices if they are turned in after 6 months of work completion / material delivered.

21- It is mandatory for the bidders to follow all the terms and conditions given in the tender documents without any addition / deletion / amendment and submit the bid accordingly. Therefore, in this context, the bidders are requested not to give their own terms and conditions as it tantamount towards the conditional bid. Otherwise their terms and conditions will not be considered and the Purchase Order / Contract will be awarded based on only as per SSGC tender terms and conditions.

22- The bidders/contractors are required to provide their only one Bank Account number (IBAN number) on the 'FORM-X' attached duly signed & stamped as one time information, which shall be firm (not changeable) for all the future payment transactions.

23- **Payment:**
The supplier after delivery of goods and its acceptance shall submit invoice to Finance Department of the Company, containing following information i.e.

(a) Purchase order No. & date
(b) Items
(c) Quantity
(d) Price
(e) Invoice value
(f) Point of delivery
(g) Delivery challan indicating delivery date, etc.
(h) Supplier(s) are required to submit signed and stamp acknowledgement slip, Sales Tax return,

Sui Southern Gas Co. Ltd. Procurement Dept. H.O. Gulshan-e-Iqbal

e-Pak Acquisition and Disposal System (EPADS) generated document | © 2026

Annex "C" & Annex "I" (whichever applicable) in which Sales Tax (of relevant Sales Tax invoice) is paid. Payment will be made within 30 days of completion of stated requirements.

24. In case the insurance policy submitted by the contractor is expired during the execution of job, it is the responsibility of the user department to coordinate with the contractor to get it renewed/updated till the period the job is completed/commissioned.

    In case the job is not completed within the given time as per tender terms and the insurance policy submitted by the contractor expires, the contractor is liable to get this insurance policy renewed / updated immediately till the period of the job is completed / commissioned as per tender terms failing which the contractor will be responsible for any loss to SSGC.
25. Bidders can quote their rates on both i.e. Schedule of Requirement/Bid Form as well as Bill of Quantity (BoQ)
26. Subsequent to the issuance of LOI, successful bidder has to submit 10% Performance Bank Guarantee of the contract value unless and until specified in the tender document.
27. Company reserve the right to award the Purchase Order /LOI to most advantageous bidder.
28. As per SRO 592(I)/2022 of PPRA Regulations, for Procurement Contracts/Purchase Orders worth of Rs. 50 million and above, bidders/contractors are required to submit the Beneficial Owner's Information for Public Procurement Contracts/Purchase Orders (Annexure-I).
29. Bidder will be blacklisted and henceforth cross debarred for participating in respective category of Public Procurement proceedings for a period of (not more than) six months, if fail to abide with a bid securing declaration (which is an integral part of tender document), however, without indulging in corrupt and fraudulent practices, if in breach of obligation(s) under the Bid conditions:
    a) The bidder have withdrawn or modified their bid during the period of bid validity as specified in the tender terms.
    b) Having been notified of the acceptance of bid by procuring agency during the period of bid validity (i) failure to sign the contract or accept purchase order (ii) fail or refuse to furnish the performance security or to comply with any other condition as mentioned in the tender document.
30. Wherever the "Rate Only" is mentioned (either on BOQ or anywhere in tender documents) the same shall only be applicable not exceeding 15% of the original procurement for the same items as given in the BOQ for package basis. In case the requirement is on item wise basis (not package basis) then not exceeding 15% of the original Procurement for the same items (on item wise basis) as given in the BOQ.
31. **Lots:** In case when the tender is floated on LOT basis, following clauses to be applied:
    a) The bidder(s) are essentially / mandatorily required to submit fixed bid bond as mentioned in the bid form/BOQ/Invitation to Bid. Separate fixed bid bond to be submitted against each individual LOT and its validity to be 150 days at the time of opening of technical proposal.
    b) Evaluation for each LOT will be carried out separately. Each LOT will be awarded separately.
32. For open competitive bidding if the most advantageous bidder is new local manufacturer, 10% trial order will be placed and remaining 90% order will be awarded to the next most advantageous bidder at their own quoted rates.
33. Redressal of Grievances And Settlement of Disputes:
    - Any bidder feeling aggrieved by any act of the procuring agency after the submission of his bid may lodge a written complaint concerning his grievances within seven days of announcement of the technical evaluation report and five days after issuance of final evaluation report.
    - In case, the complaint is filed against the technical evaluation report, the GRC shall suspend the procurement proceedings.
    - In case, the complaint is filed after the issuance of final evaluation report, the complainant cannot raise any objection on technical evaluation of the report. Provided that the complainant may raise the objection on any part of the final evaluation report in case where single stage single envelope bidding procedure is adopted.
34. All the bidders are allowed to participate in the subject procurement without regard to nationality/origin, except bidders of some nationality/origin, prohibited in accordance with policy of the Federal Government. Following countries are ineligible to participate in the procurement process:
    - India
    - Israel

Sui Southern Gas Co. Ltd. Procurement Dept. H.O. Gulshan-e-Iqbal

35. In Open Competitive Bidding Procedure where the quoted price is less than Rs. 500,000/- the Bid Bond will be retained in lieu of PBG.

36. In case the Bid Bond is not required, the bidder must submit the Form of Bid-Securing Declaration attached with the Tender Document else the Bid will be liable for rejection.

37. All Tenders floated through EPADS are to be governed by S.R.O. 296(I)/2023 dated: March 8, 2023 "E-Pak-Procurement Regulations 2023". In case of any conflict between SSGC Tender Terms / Instructions to Bidders and the PPRA EPADS Rules, the S.R.O. 296(I)/2023 will prevail.

Sui Southern Gas Co. Ltd. Procurement Dept. H.Q. Gulshan-e-Iqbal

PUBLIC PROCUREMENT REGULATORY AUTHORITY (PPRA) EPADS

SECTION –

General Terms & Conditions

1. **Definitions and Interpretation:**

1.1 In these tender documents (as hereinafter defined) the following words and expressions shall have the meaning hereby assigned to them except where the Tender requires otherwise.

a) **Company** means the Sui Southern Gas Company Limited; a Company registered under statutes of Pakistan and includes any successors-in-interest or assignees.

b) **Engineer** means the Engineer(s) nominated by the Company to look after and supervise the Work.

c) **Representative of the Company** means a duly authorized person appointed by the Company or as specified in the "Special Conditions of the Contract" to perform the assigned duties.

d) **Bidder** means any person or persons, firm or company bidding for the Work.

e) **Contractor** means the persons, firm or company whose Tender (as hereinafter defined) has been accepted by the Company and includes the Contractor's representatives, sub-Contractors, successors and permitted assignees (Prior to the execution of the Contract the word "Contractor" also means a Tenderer or Bidder submitting a proposal in accordance with the Tender Documents).

f) **Agent or Representative** means person(s) appointed by the Contractor to perform duties as set forth in the Contract.

g) **Laborers/Workmen** means such laborers/workmen and staff as may be employed by the Contractor for purpose of carrying out the Work.

h) **Sub Contractor** means any firm or person having a direct Contract with the Contractor. Nothing contained herein however, shall be deemed or be construed to impose upon the Company, any obligation, liability or duty to a sub-contractor or to create any contractual relation between any sub-contractor and the Company.

i) **Work** means whole of the Works / Services or part thereof to be executed in accordance with Tender / Contract documents, whether temporary or permanent and whether original, altered substituted or additional.

j) **Contract Documents** shall consist of duly executed Articles of Agreement, the Tender Documents and the Tender submitted by the successful Bidder including modifications thereto incorporated in the documents before and after the execution of the Contract.

k) **Contract Price/Value** means the sum named in Schedule of (SOR) / BOQ subject to additions thereto or deductions there from as may be made under the provisions hereinafter contained.

l) **Plant** means all machineries, equipment, materials, appliances or things of whatsoever nature required in or about the execution, completion or maintenance of the Work, but does not include such equipment, materials, appliances or things intended to form part of the permanent Work.

m) **Temporary Works** means all temporary works of every kind required in or about the execution, completion or maintenance of the Work.

n) **Drawings** means the drawings referred to in the Contract documents and any modification of such drawings.

o) **Location** means the land and other places on, under in or through which the Work is to be executed or carried out and other lands or places provided by the Company for the purpose of the Contract.

p) **Approved/Approval** means approved/approval in writing by Company's representative or as specified in "Special Conditions of Contract".

q) **Tender/Bid** means the offer tendered by the Bidder for the Work governed by the Contract.

r) When the terms Acceptable, Satisfactory, Proper, or other such general qualifying terms are used in the Contract, it shall be understood that reference is made to be sole ruling and the sole judgment of the Company.

s) The Word Equivalent or Equal where used in these documents in the general sense shall not mean Similar but shall mean "Conforming to, Like, of Kind/Quality and Function". "Proprietary Items" and "Trade Names" are used for the purposes of establishing a standard of "Kind, Quality and Function" and "Equipment" items, articles, things or materials will be approved, if held to be "Equivalent" by the Company.

t) **Approved Banker** wherever occurring in this Contract shall mean a Scheduled Commercial Bank operating in Karachi and acceptable to the Company.

Sui Southern Gas Co. Ltd. Procurement Dept. HO Karachi

u) **Specification(s)** means the standard codes of practice and other specifications issued with the Tender and any notification such as specifications approved in writing by the Company and other specifications as may from time to time be furnished or approved in writing by the Company.

v) **Month** means calendar month of the Christian era.

w) **Time Schedule** is a graphical illustration of the time span of various Work activities defining starting and completion dates.

x) **Bonds** mean Bid Bond, Performance Bond or Bank Guarantee and other instruments of security furnished by the Bidder of his surety in accordance with the Tender/Contract.

y) **Completion Date** means the date on which the Work has been completed in accordance with the Contract so that it can be utilized for intended purpose.

z) **Day** means a day of 24 hours mid night to mid night.

aa) **Completion Period** means the time allowed for the execution of the Work.

1.2 Words importing the singular only also include the plural and vice-versa where the Contract so requires.

1.3 The marginal headings or notes in these Conditions of Contract shall not be deemed to be part thereof or be taken into consideration in the interpretation or construction thereof or of the Contract.

1.4 If there is any conflict between the Special Conditions and the General Conditions, the Special Conditions shall modify, supplement and supersede the General Conditions.

2. **Examination:**
Bidders shall visit/inspect/examine the Work & Location and shall fully acquaint themselves with the nature and requirements of Work/Services, access to Work/Location, availability of materials, weather, law and order and local conditions etc. before submitting their Bids. Submission of the Bid shall be prima facie evidence that the Bidders have fulfilled this requirement and shall be binding upon him.

3. **Conflict between Drawings/Specifications/SOR:**
In case of any conflict between drawings/specifications, SOW/TOR and SOR/BOQ, with regard to the quality of any item, the Contractor / Consultant shall base his quotation for the better quality. In case of any deficiency in the drawings/details, the Contractor / Consultants shall seek clarification from the Company. Submission of Bids/rates on the basis of incomplete drawings/details shall be Contractor / Consultant's sole responsibility.

4. **Additions, Deletions:**
The Company reserves the right to make addition (Upto 15 %) and delete the quantity from the Work defined in SOW/TOR/SOR/BOQ as deemed necessary before or after the execution of the Contract. All such additions and deletions shall only be authorized in writing by the Company.

5. **Schedule of Requirement:**
The quantities specified in the SOR/BOQ are estimated and are intended to serve only as a guide to the Bidders. Payments shall be made on the basis of actual Work quantum done as measured. No claims or adjustments shall be entertained/allowed on account of increase or decrease in the Scope of Work which has not been duly authorized by the Company through the issue of change orders as stipulated in the relevant provision.

6. **Rate:**
The Bidder shall quote all item rates and lump sum prices as shown in the "SOR/BOQ". Bidders shall fill in the rate / price for each item in the SOR/BOQ. In case of any discrepancy between item rate and the amount, the quoted item rate will prevail. The quantities given in the SOR/BOQ are estimated ones and are subject to variations. That is, there could be increase or decrease. Nevertheless, the item rates quoted by the Bidder shall remain fixed and no escalation whatsoever shall be permissible. The rates / prices quoted by the Bidder shall be workable. The Bidder shall be required to furnish a complete rate analysis of any item in the SOR/BOQ as considered necessary, by the Company.

7. **Escalation:**
It may be clearly understood that this tender does not contain a price variation clause and therefore, all unit prices quoted shall be firm, irrevocable fixed and valid until completion of the Contract and will not be subject to variation on any account.

8. **Validity:**
Bids shall remain valid for acceptance for a period of (120) days from the date of bid opening. If the last date falls on a holiday, the validity will be extended to the first Company working day thereafter.

9. **Bid Bond (Earnest Money):**
The Bidder is required to furnish Bid Bond strictly in accordance with the prescribed format, in the form of a Pay Order, Demand Draft or Bank Guarantee issued only by a scheduled commercial bank operating in Karachi, for an amount fixed bid bond as specified of tendered Work / Services quoted by the Bidder in favor of Sui Southern Gas Company Limited. No Bid shall be considered without a Bid Bond and no cash or cheque or a guarantee issued by an insurance company shall be accepted.

The Bid Bond shall remain valid for a period of 150 days from the date of Bid opening. Bid Bonds of the unsuccessful Bidders shall be returned as soon as practicable, The successful Bidder's Bid Bond sphall be retained by Company until execution of a Contract for the Work / Services defined in these documents and the submission of a Performance Bond prior to the execution of Contract.

In the event that the successful Bidder refuses or fails to provide (PBG) and Stamp papers for contract within fifteen (15) days of the issuance of a Letter of Intent, Company shall be at liberty to forfeit the Bid Bond.

In the event of the bid bond validity falling short of the prescribed period of 150 days as the case may be either (i) due to extension in the bid submission date or (ii) where so required by the procuring agency, than in such an event it shall be mandatory on the bidder to extend the bid bond validity up to 150 days within 30 days of the opening of technical proposal / bid, and / or where so required by the procuring agency.

In case when bidder submit alternate bids a separate bid bond for each bid is required otherwise bid will be liable for rejection. In case of Single Stage Two Envelope bidding system (bid bond will be enclosed with "Financial" bid, unless and until specified separately in Tender terms).

The bid bond may be forfeited if a bidder withdraws the bid during validity period specified by the bidder or if successful bidder fails to:

- Accept purchases order/LOI,
- Furnish performance guarantee in accordance with clause 10 of General Terms & Conditions,
- Extend Services as per requirement and completion Period.

10. Performance Bond:

The Bidder shall furnish a Performance Bond strictly (if the bid increases to Rs. 500,000/-) in accordance with the prescribed format in the form of a bank guarantee issued by a scheduled commercial bank operating in Karachi for an amount equivalent to _____ ( ) percent of the Contract value. Failure to furnish the performance Bond before execution of the Contract will entitle the Company to consider the Bidder as having abandoned the Contract and the forfeit the Bid Bond. The Performance Bond shall remain valid till after three (03) month of completion of the work.

The Company's right to recover damages from the Bidder for breach of Contract shall not be limited to the value of the Performance Bond. In the event of the Bidder failing to execute a formal Contract or to submit the Performance Bond in the manner aforesaid and in the period specified, the Company shall be entitled to appropriate the earnest money submitted by the Bidder with his tender without prejudice to its right to claim any further loss or damage which may result to it by reason of the aforesaid default of the Bidder as if Contract is actually executed for the purpose of such claims.

The Bidder shall extend the validity period of the Performance Bond for such period(s) as required for the Contract performance.

The performance bond of the successful bidder will be released after successful completion of work.

11. Retention Money:

The amount to be retained from payments shall be equal to the specified percent of certified value of Work which would be released after the maintenance period.

12. Completion Period:

Subject to any requirements as to completion of any portion of the Work before the completion of the whole of Work, the Work shall be completed within the specified completion period. The Work shall not be considered as completed until the Company has certified in writing that it has been completed. Should extra, altered or additional Work of any kind, or any other cause of delay, which in the opinion of the Company could not have been foreseen by the Contractor / Consultant requires extension in completion time, then on the written request of the Contractor / Consultant, the completion period as provided in the Contract shall be extended by the Company. All such extensions shall be allowed in writing by the Company's representative.

13. Signing / Execution of Contract / Agreement:

Formal signing / execution of Contract / Agreement shall be completed within fifteen (15) days of receipt of "Letter to Proceed". The Company shall prepare the Contract in accordance with the prescribed format (Contract Form, and Articles of Agreement) for the purpose and the successful Bidder shall be communicated the date and time by the Company for the execution of Contract.

The successful Bidder shall provide the stamp paper, of value at the rate of thirty five (35) paisa per every hundred Rupees or part thereof of the amount of the Contract, or at the prevailing rate as specified by the Government of Pakistan.

Sui Southern Gas Co. Ltd. Procurement Dept.

In case the agreement is executed for services i.e Janitorial, Canteen, Landscaping, Maintenance Contract etc.... will be for One year extendable for further Two terms of one year each unless specified in Special Term & conditions.

14. Award / Evaluation Criteria:

Company reserves the right to settle the final award of job to the technically compliant and lowest evaluated and commercially responsive bidder.

Evaluation may be carried out both on item or on group of items/single or multiple package basis depending upon the nature of requirement exclusively at the discretion of the company to ensure economic procurement.

15. Commencement & Execution of Work:

Notwithstanding any delay in the preparation / execution of the Contract the successful Bidder shall commence mobilization / preparations and under take the Work within (15) days after receipt of the Letter to Proceed.

The Contractor / Consultant shall prior to commencement of Work, obtain the written authority and instructions of the Company.

16. Change in Orders:

The Company may at any time, by a written notice to the Contractor / Consultant, make changes within the general Scope of Work of the Contract.

Upon notification by the Company of such change, the Contractor / Consultant shall submit to the Company an estimate of costs for the proposed change (hereinafter referred to as a change) within ten (10) calendar days of receipt of notice of the change, and shall include an estimate of the impact (if any) of the change on the completion date (s) under the Contract, as well as detailed schedule for the execution of the change, if applicable.

The Contractor / Consultant shall not perform changes in accordance with above, until the Company has authorized a Change Order in writing on the basis of the estimate provided by the Contractor / Consultant.

Changes mutually agreed upon as a change shall constitute a part of the Work under this Contract, and the provisions and conditions of the Contract shall apply to said change.

17. Assignment:

The Contractor / Consultant shall not assign, in whole or in part, its obligations to perform under the Contract except with the Company's prior written consent.

18. Termination of Contract:

The Company may decide to terminate the Contract in one of the following situations:

(i) **Termination for Default:**

The Company may, without prejudice to any other remedy for breach of Contract, by written notice of default sent to the Contractor / Consultant, terminate the Contract in whole or in part.

(a) If the Contractor / Consultant fails to complete the contracted Works / Services within the time period(s) specified in the Contract or any extension thereof granted by the Company.

(b) If the Contractor / Consultant fails to perform any other obligation(s) under the Contract.

(c) If the Company during the completion period of the Contract has reason to believe that the Contractor / Consultant will not be able to fulfill the obligations under the Contract.

Prior to the exercising of any right by the Company to terminate the Contract, the Company shall issue notice to the Contractor / Consultant specifying the default(s) and the Contractor / Consultant shall submit an explanation within seven (07) days of receipt of such notice. If such explanation is not furnished within the stipulated time or if so furnished, is found to be unsatisfactory and / or the default(s) continues, the Contract may be terminated by the Company.

(ii) **Termination for Insolvency:**

The Company may at any time terminate the Contract by giving written notice to the Contractor / Consultant, without compensation to the Contractor / Consultant, if the Contractor / Consultant becomes bankrupt or otherwise insolvent. Notwithstanding the above such termination will not prejudice or affect any right of action or remedy which as accrued or will occur thereafter to the Company.

Sui Southern Gas Co. Ltd. Procurement Dept. H.O. Gulshan-e-Iqbal

(iii) **Termination for Convenience:**

a. The Company may by written notice sent to the Contractor / Consultant, terminate the Contract, in whole or in part, at any time for its convenience. The notice of termination shall specify that termination is for the company's convenience, the extent to which performance of work under the Contract is terminated and the date upon which such termination becomes effective.

b. The Works that are complete and ready for Commissioning within thirty (30) days after the Contractor / Consultant's receipt of notice of termination shall be at the Contract prices and on the existing Contract terms. For the remaining Works, the Company can also opt to have any portion thereof completed and commissioned at the contract prices and on the other contract terms.

19. Liquidated Damages:

If the Contractor / Consultant fails to complete the Work or perform the Services specified in the Contract within the stipulated period / scheduled time specified in the Contract, the Company, without prejudice to any other remedies, shall deduct from the bills or any other due payments / guarantees, as liquidated damages, a sum equivalent to 0.1 % per day of the value the Contract, until actual completion of the Work or performance of the Services. However if delay of over 100 days takes place (i.e. equal to 10%), the Company reserves the right to terminate the Contract at the risk and cost of Contractor / Consultant. The liquidated damages shall also be applicable for the Works / Services terminated under Clause 16.

The payment of liquidated damages shall not relieve the Contractor / Consultant from performing and fulfilling all its obligations under the Contract and nor shall the rights and entitlements of the Company be affected or reduced in any manner.

20. Force Majeure:

The parties will not be considered to be in default in the execution of their contractual obligations or any of them to the extent that the execution of such obligations or any of them is delayed or omitted by cause of Force Majeure. Each party will advise the other party by written notice within 07 days of the occurrence of any such case of Force Majeure. The term Force Majeure employed herein shall mean acts of public enemy, wars (whether declared or not) invasion, hostilities, revolution, epidemics, riots (other than among the Contractor / Consultant's own employees) fires, floods, earth quake, commotion, disorder and other causes similar in kind to those herein mentioned, not under the control of either party, which makes the performance of this agreement unfeasible and which by the exercise of due diligence the party seeking excuse from performance is unable to over come.

The Company shall not be liable to the Contractor / Consultant for any damage or loss caused by Force Majeure directly or indirectly.

21. Safety of Employees and Works:

The Contractor / Consultant shall be responsible to take all necessary precautions for the safety of employees on or off the Work, and shall comply with all applicable safety laws and codes to prevent accidents or injury to persons on about or adjacent to the places where the Work is being performed. All statutory rules, orders, regulation from time to time in force relating to taking and observance of all safety precaution governing or which might be deemed to be given during the execution and performance of the Work. The Contractor / Consultant shall comply with any and all personnel safety regulations. Any person of the Contractor / Consultant violating the safety rules shall be removed by the Contractor / Consultant from site and replaced without delay.

22. Insurance:

The Contractor / Consultant shall be responsible for obtaining a Contractor / Consultant's All Risk Policy (CAR) against risks to the Works and shall make good at his own cost, all losses or damages whether to the Works or to the lives, persons, whether under the workmen's compensation Act or Third Party Risk, or property of others from whatsoever cause arising out of or in connection with the works either during the progress of the works or during the period of maintenance provided by this Contract.

The Contractor / Consultant shall arrange insurance approved by the Company fully to cover workmen compensation and other claims arising out of sickness, injury or death of his personnel working at site and also to cover theft, loss of or damage to the Company's material in his possession and to indemnity the Company for third party claims for damage done or said to have been done to those persons or their property as a result of the Contractor / Consultant's activities on and off the site.

Sui Southern Gas Co. Ltd. Procurement Dept. H.O Gulshan-e-Iqbal

Insurance will be required where ever applicable:
Company's Address:
GENERAL MANAGER (PROCUREMENT)
SUI SOUTHERN GAS COMPANY LIMITED,
2ND FLOOR, HEAD OFFICE, ST-4/B, B-14,
SIR SHAH SULEMAN ROAD,
GULSHAN-E- IQBAL,
KARACHI –PAKISTAN.

Contractor / Consultant's Address:

_____
_____
_____

23. Dispute Resolution:

If any dispute shall arise as to the interpretation of this Contract or any matter or thing arising there from, the same shall be settled as far as possible by way of amicable resolution. Failing such settlement, the dispute may be referred for arbitration to two Arbitrators, one to be nominated by each Party. The appointed Arbitrators shall before proceeding on the reference appoint an Umpire. The Award given by the Arbitrators or the Umpire as the case may be shall be final and binding on the Parties. The proceedings shall be governed by the Pakistan Arbitration Act, 1940 and any statutory modification thereof. The venue of arbitration shall be Karachi.

All costs of Arbitration shall be borne by the Parties themselves, unless otherwise ordered by the Arbitrator. Notwithstanding the existence of any difference or dispute, or the commencement or continuance of any arbitration proceedings, Works to be done or Services to be provided under this Contract shall not be suspended or discontinued by the Contractor / Consultant nor shall any payment be withheld by the Company except the difference of the amount in dispute, which is the subject matter of such proceedings.

24. Income Tax and Duties:

All kinds of Government Taxes and Duties (income tax, custom duties, etc.) also the provincial sales tax as per provincial law, against any item of the contract, shall be entirely the responsibility of the Contractor / Consultant. Income Tax will be deducted as applicable under the prevailing Government Rules. Rate of Income Tax deduction in relation to submission of Income Tax certificate from the Contractor / Consultant should also be stipulated.

All Foreign Service providers are required to obtain Advance Ruling from the Federal Board of Revenue (FBR) under Section 206A of the Income Tax Ordinance 2001 (Pakistan's Income Tax Law). The advance Ruling issued by FBR covers application of Income Tax Ordinance 2001 to Transaction proposed or entered in to Foreign Service Provider".

25. Payments:

Payment will be made within 30 days after completion of works.

The Contractor / Consultant shall submit to the Company during the execution of the Work on-account bills along with a statement / details of executed Work.

The rates and prices in such on-account bills and statement of Work shall be in accordance with those in the SOR/BOQ so far as such rates and prices are applicable and on the approved rates and prices for other items of Work. All payments against on-account bills shall be treated as provisional payments and will be subject to final adjustment.

The Company may withhold payment or on-account of subsequently discovered evidence, nullify the whole or part of any certificate to such extent as may be necessary to protect itself from loss on-account of:

(a) Defective Work not remedied.
(b) Claims filed or reasonable evidence indicating probable filling of claim.
(c) Failure of the Contractor / Consultant to make payments properly to Sub-Contractor / Consultants.
(d) Damage to another Contractor / Consultant.

When the grounds are removed payment shall be made for amounts withheld because of them.

Payments in respect of extra / additional Work will be made on the basis of the original Contract rates and the Contractor / Consultant will not be entitled to any extra compensation / payment including idle charges because of such delays.

Sui Southern Gas Co. Ltd. Procurement Dept.

The making and acceptance of the final payment after successful completion of Work shall constitute a waiver of all claims by the Company other than those arising from faulty Work appearing after final payment and of all claims by the Contractor / Consultant, except those previously made and still unsettled.

Supplier (s) are required to submit signed and stamped acknowledgement slip, Sale Tax return, Annex "C" & Annex "I" (whichever applicable) in which Sales Tax (of relevant Sales Tax invoice) is paid.

26. Blacklisting of Suppliers and Contractor / Consultants:

The company shall permanently blacklist or temporarily debar (at least for 6-months from participating in SSGC's tender proceeding) if, a supplier or Contractor / Consultant who either constantly fails to perform satisfactorily or found to be indulged in corrupt and fraudulent practices as defined blow:

26.1 Corrupt and fraudulent practices" includes the offering, giving, receiving, or soliciting of anything of value to influence the action of an official/company.

26.2 If the supplier/Contractor / Consultant found responsible for the detriment of the company during proceedings of procurement/contract, process or its execution.

26.3 Misrepresentation of facts (by providing fake documents, concealing / mis- reporting facts pertaining to the bid) in order to influence the procurement process or the execution of the purchase order/contract.

26.4 Collusive practices among bidders (prior to or after bid submission) designed to establish bid prices at artificial, non-competitive levels and to deprive the company of the benefits of free and open competitive.

Please follow the Attached Blacklisting Mechanism

Please follow the Attached Black Listing Mechanism

27. GOP's Obligation:

The contract shall be governed by the Law of Pakistan. The Contractor / Consultant is obligated to comply with all regulations and ordinance in force or to be passed by the Government of Pakistan in connection with Labor legislation during the course of the work to be performed. Any additional financial charges on account of revision in minimum wages by GOP will be company's responsibility while the contract is in operation.

This contract embodies the entire understanding of the parties hereto on this subject and there are no commitment, terms, conditions or obligations, oral or written, express or implied, other than those contained herein.

28. Late Bid:

Sealed bids shall be mailed/submitted/dropped in tender box placed at Tender Room, CRD Building, and SSGC Head Office, In accordance to the time specified in invitation to bid & tender notice (which ever applicable), Bids are to be delivered on or before closing time after which all bids submitted after the time prescribed shall not be entertained and will be returned without being opened. In case bid is sent through courier, the same shall be delivered at least half an hour before scheduled opening time.

29. Rebate / Discount:

Unit rate (s) given in the Bill of Quantities shall take into account all relevant factors including discount if any. Discount given separately at the time of bid opening will not be considered.

30. Joint Ventures:

In the event that the bidder is bidding as a Joint Venture, the Company will require the joint venture agreement duly executed by the parties to the Joint Venture to be submitted with the bid. The joint venture parties shall also furnish an undertaking to be jointly and severally liable for all liabilities arising out of obligation under the Purchase Order / Contract. The, Joint Venture agreement of the parties must specify share of each partner and name of the lead partner along with their registration with the FBR, SST and BST as the case may be failure to specify these two narrations the joint venture agreement will not be entertained.

31. Correction / Amendments in Quoted Price:

Any overwriting in BOQ / SOR is not allowed. In case of type of any amendment / correction required in unit price / total amount the same has to be strikeout and re-written with corrected figures, properly signed & stamped out, in order to avoid an ambiguous bid.

Sui Southern Gas Co. Ltd. Procurement Dept. H.O. Karachi

FINANCIAL PROPOSAL

Sui Southern Gas Co. Ltd.
Procurement Dept.
H.O. Gulshan-e-Iqbal

PUBLIC PROCUREMENT REGULATORY AUTHORITY (PPRA) EPADS

SECTION-VII

TENDER FORM

Note: This section forms a part of the tender. Bidders are required to fill in the blank spaces, sign and stamp on this tender form

Sui Southern Gas Company Limited,
ST 4/B, Block 14, Sir Shah Muhammad Suleman Road,
Gulshan-e-Iqbal,
KARACHI.

Renovation Works of CP Stations (16 Nos.) & Guard Rooms (02 Nos.) and New Construction of Care Taker Rooms (02 Nos.) at different locations in HQ-3 Hyderabad Section

Tender Ref No. CIV-CC-P&C-2K2628

Dear Sir,

1. Having examined the Site, Drawings, Conditions of Contract, Scope of Work and Bill of Quantities for the subject Work, I/We, the undersigned offer to undertake, complete and maintain the whole of the said Work in conformity with the contract terms the unit rates given.

2 I/We undertake, if my/our tender is accepted, to commence the Work within specified time after receipt of the letter of intent/letter to proceed/signing of contract, and to complete and deliver the whole of the Work contained in the contract within the period specified in the tender document.

3. I/We agree to abide by this tender for the period of **120 days** from the date fixed for opening the same and it shall remain binding upon me/us and may be accepted at any time before the expiration of this period.

4. I/We agree to execute the Work in a manner satisfactory to the Company whose decision shall be final and without appeal on work methods, specifications, and quality of materials, equipment and workmanship.

5. I/We agree to supervise and furnish adequate engineering and supervisory staff, labour force, tools, plants, machinery and finances to perform the Work in time as specified in the agreed Time Schedule to ensure that all will be done in accordance with accepted international engineering standards.

6. Unless and until a formal agreement is prepared and executed, this tender together with the Company's written acceptance shall constitute a binding contract between us.
7. I/We understand that the Company is not bound to accept the lowest or any tender received without assigning any reasons.

8. For ease of reference certain information and special stipulations applicable to the contract within the subject of the tender are set forth herewith:

Sui Southern Gas Co. Ltd. Procurement Dept. H.O Gulshan-e-Iqbal

a.	Name of the Company	:	**Sui Southern Gas Company Limited**
b.	Name of Work	:	**Renovation Works of CP Stations (16 Nos.) & Guard Rooms (02 Nos.) and New Construction of Care Taker Rooms (02 Nos.) at different locations in HQ-3 Hyderabad Section**
c.	Amount of Bid	:	Rs._____ **(To be filled in by the Bidder)**
d.	Date of award of Work	:	Date of acknowledgement of Letter of Intent (LOI) by the Bidder
e.	Mobilization Period	:	**One (01) Week** from the date mentioned in the Letter to Proceed (LTP)
f.	Performance Bond	:	**Five (5%) Percent** of the Contract / Bid Value as as per Clause 6, Section-IV "Special Conditions of Contract"
g.	Retention Money	:	Deduction at the rate of **(5%) percent** from the progress and final payments
h.	Completion Period	:	**Seven (07) Months** from the date mentioned in Letter to Proceed (LTP).
i.	Mode of Payment	:	As per Clause 10 Section-IV "Special Conditions" of Tender Enquiry
j.	Maintenance Period	:	**Twelve (12) Months** from the date of completion.
k.	Liquidated Damages	:	**0.1% percent** of contract value for each day of delayed services to a maximum of Ten 10% of the total contract value.
l.	Insurance (CAR)	:	Contract Value + 10% of contract value

Name of bidder or authorised representative _____
(In block letters)

Dated this _____ day of _____2026.

Signature: _____

In the capacity of _____ duly authorized to sign the tender

For and on behalf of _____
(Name of Company with seal/stamp)

Witness

Signature: _____

Name : _____

Address : _____

Sui Southern Gas Co. Ltd. H.O. Gulshan-e-Iqbal Procurement Dept.

Renovation Works of CP Stations (16 Nos.) & Guard Rooms (02 Nos.) and New Construction of Care Taker Rooms (02 Nos.) at different locations in HQ-3 Hyderabad Section

Bill of Quantity (BOQ)

SUMMARY

Item#	Description	Amount (Rs.)
A)	**Renovation Works for CP Stations (16 Nos.) & Guard Rooms (02 Nos.)**	
1	CPS Room (15.5' x 11' x 12') at MP-278 1/2 ILBP Village Khuda Bux Jakhro	
2	CPS Room (11' x 11' x 12') at MP-274 ILBP Village Nazar Jakhro	
3	CPS Room (16' x 12' x 12') at MP-268 ILBP Mujahid Khoso	
4	CPS Room (16' x 12' x 12') at MP-259 ILBP SMS Kotri	
5	MP-256-1/2 ILBP	
(a)	CPS Room (16' x 12' x 12')	
(b)	Guard Room (12' x 12' x 12')	
6	MP-252 ILBP Sandoz Jamshoro	
(a)	CPS Room (12' x 12' x 12')	
(b)	Guard Room (8' x 8' x 10')	
7	CPS Room (14' x 12' x 12') at MP-246-1/2 ILBP	
8	CPS Room (38' x 12'-6" x 12') at MP-242-1/2 ILBP Wanki Wasi	
9	CPS Room (12'-6" x 12'-6" x 12') at MP-237-1/2 ILBP Tando Allah Yar	
10	CPS Room (12' x 12' x 12') at MP-232 ILBP Near SMS Palijani	
11	CPS Room (16' x 12' x 12') at MP-225-1/2 ILBP Udero Lal	
12	CPS Room (12' x 12' x 12') at MP-210 ILBP RS-3 Shahdadpur	
13	CPS Room (12' x 12' x 12') at KMP-26 BGFIP Khaskheli Field Dasro Goth	
14	CPS Room (20' x 12' x 12') at KMP-43 BGFIP Rao Haliphot Goth	
15	CPS Room (12' x 12' x 12') at KMP-72 BGFIP	
16	CPS Room (20' x 12' x 12') at KMP-87 BGFIP Husri	
	Total Amount (A) Rs.	
B)	**New Construction of Care Taker Rooms (02 Nos.) (Size: 10' x 10' x 10')**	
(a)	MP-274 ILBP Village Nazar Jakhro	
(b)	MP-246-1/2 ILBP	
	Total Amount (B) Rs.	
	Total Amount Rs .(A+B)	

Ghulam Ali Mahar
General Manager
Projects & Construction Dept.

Sui Southern Gas Co. Ltd. Procurement Dept. HQ Gulshan-e-Iqbal

SECTION VIII

Renovation Works of CP Stations (16 Nos.) & Guard Rooms (02 Nos.) and New Construction of Care Taker Rooms (02 Nos.) at different locations in HQ-3 Hyderabad Section

Bill of Quantity

Item #	Description	Unit	Quantity	Rate (Rs./Qty)	Amount (Rs.)
A)	**Renovation Works for CP Stations (16 Nos.) & Guard Rooms (02 Nos.)**				
	Providing all tools, materials, equipment and labour for Renovation Works of CPS Solar Rooms at the following locations, as per Scope of Work (**Section-III & VIII-A**), Drawings (**Section-IX**), Site conditions and as directed by Engineer Incharge.				
1	**CPS Room (15.5' x 11' x 12') at MP-278 1/2 ILBP Village Khuda Bux Jakhro**				
(i)	Roof Screeding	Sft	310		
(ii)	Plaster	Sft	758		
(iii)	Paint	Sft	1949		
(iv)	Block / Brick Masonry	Cft	200		
(v)	Plinth Protection	Sft	195		
(vi)	C.C Flooring	Sft	331		
(vii)	M.S Door Repair	Lumpsum	1		
			Total Amount (1) (Rs.)		
2	**CPS Room (11' x 11' x 12') at MP-274 ILBP Village Nazar Jakhro**				
(i)	Roof Screeding	Sft	240		
(ii)	Plaster	Sft	375		
(iii)	Paint	Sft	1618		
(iv)	Block / Brick Masonry	Cft	278		
(v)	Plinth Protection	Sft	177		
(vi)	C.C Flooring	Sft	121		
(vii)	New M.S Door	Sft	21		
(viii)	New M.S Louver Vents	Sft	40		
			Total Amount (2) (Rs.)		
3	**CPS Room (16' x 12' x 12') at MP-268 ILBP Mujahid Khoso**				
(i)	Roof Screeding	Sft	338		
(ii)	Paint	Sft	1856		
(iii)	Block / Brick Masonry	Cft	219		
(iv)	Plinth Protection	Sft	213		
			Total Amount (3) (Rs.)		
4	**CPS Room (16' x 12' x 12') at MP-259 ILBP SMS Kotri**				
(i)	Roof Screeding	Sft	338		
(ii)	Paint	Sft	1856		
(iii)	Block / Brick Masonry	Cft	219		
(iv).	Plinth Protection	Sft	213		
			Total Amount (4) (Rs.)		
5	**MP-256-1/2 ILBP**				
(a)	**CPS Room (16' x 12' x 12')**				
(i)	Roof Screeding	Sft	338		
(ii)	Paint	Sft	1856		
(iii)	Block / Brick Masonry	Cft	219		
(iv)	Plinth Protection	Sft	213		

Ghulam Ali Bhatti
General Manager
Projects & Construction

Sui Southern Gas Co. Ltd.
Procurement Dept.
H.O. Gulshan-e-Iqbal

SECTION VIII

Renovation Works of CP Stations (16 Nos.) & Guard Rooms (02 Nos.) and New Construction of Care Taker Rooms (02 Nos.) at different locations in HQ-3 Hyderabad Section

Bill of Quantity

Item #	Description	Unit	Quantity	Rate (Rs./Qty)	Amount (Rs.)
(b)	**Guard Room (12' x 12' x 12')**				
(i)	Roof Screeding	Sft	272		
(ii)	Paint	Sft	1496		
(iii)	Block / Brick Masonry	Cft	198		
(iv)	Plinth Protection	Sft	189		
				Total Amount (5) (Rs.)	
6	**MP-252 ILBP Sandoz Jamshoro**				
(a)	**CPS Room (12' x 12' x 12')**				
(i)	Roof Screeding	Sft	272		
(ii)	Plaster	Sft	376		
(iii)	Paint	Sft	1611		
(iv)	Block / Brick Masonry	Cft	198		
(v)	Plinth Protection	Sft	189		
(vi)	C.C Flooring	Sft	1144		
(b)	**Guard Room (8' x 8' x 10')**				
(i)	Roof Screeding	Sft	132		
(ii)	Paint	Sft	897		
(iii)	Block / Brick Masonry	Cft	153		
(iv)	Plinth Protection	Sft	141		
				Total Amount (6) (Rs.)	
7	**CPS Room (14' x 12' x 12') at MP-246-1/2 ILBP**				
(i)	Roof Screeding	Sft	341		
(ii)	Paint	Sft	2237		
(iii)	Block / Brick Masonry	Cft	211		
(iv)	Plinth Protection	Sft	201		
(v)	C.C Flooring	Sft	168		
(vi)	M.S Door Repair	Lumpsum	1		
(vii)	M.S Louvre Vent Repair	Lumpsum	1		
				Total Amount (7) (Rs.)	
8	**CPS Room (38' x 12'-6" x 12') at MP-242-1/2 ILBP Wanki Wasi**				
(i)	Roof Screeding	Sft	723		
(ii)	Plaster	Sft	1226		
(iii)	Paint	Sft	3453		
(iv)	Block / Brick Masonry	Cft	350		
(v)	Plinth Protection	Sft	366		
(vi)	C.C Flooring	Sft	475		
				Total Amount (8) (Rs.)	

Ghulam Ali Mahar
General Manager
Projects & Construction Deptt

Sui Southern Gas Co. Ltd. Procurement Dept. H.O. Gulshan-e-Iqbal

e-Pak Acquisition and Disposal System (EPADS) generated document | © 2026

SECTION VIII

Renovation Works of CP Stations (16 Nos.) & Guard Rooms (02 Nos.) and New Construction of Care Taker Rooms (02 Nos.) at different locations in HQ-3 Hyderabad Section

Bill of Quantity

Item #	Description	Unit	Quantity	Rate (Rs./Qty)	Amount (Rs.)
9	**CPS Room (12'-6" x 12'-6" x 12') at MP-237-1/2 ILBP Tando Allah Yar**				
(i)	Roof Screeding	Sft	289		
(ii)	Plaster	Sft	580		
(iii)	Paint	Sft	1680		
(iv)	Block / Brick Masonry	Cft	203		
(v)	Plinth Protection	Sft	195		
(vi)	C.C Flooring	Sft	156		
			Total Amount (9) (Rs.)		
10	**CPS Room (12' x 12' x 12') at MP-232 ILBP Near SMS Palijani**				
(i)	Roof Screeding	Sft	272		
(ii)	Plaster	Sft	756		
(iii)	Paint	Sft	1611		
(iv)	Block / Brick Masonry	Cft	263		
(v)	Plinth Protection	Sft	189		
(vi)	C.C Flooring	Sft	144		
			Total Amount (10) (Rs.)		
11	**CPS Room (16' x 12' x 12') at MP-225-1/2 ILBP Udero Lal**				
(i)	Roof Screeding	Sft	338		
(ii)	Plaster	Sft	590		
(iii)	Paint	Sft	1856		
(iv)	Block / Brick Masonry	Cft	219		
(v)	Plinth Protection	Sft	213		
(vi)	C.C Flooring	Sft	192		
			Total Amount (11) (Rs.)		
12	**CPS Room (12' x 12' x 12') at MP-210 ILBP RS-3 Shahdadpur**				
(i)	Roof Screeding	Sft	272		
(ii)	Plaster	Sft	408		
(iii)	Paint	Sft	1611		
(iv)	Block / Brick Masonry	Cft	137		
(v)	Plinth Protection	Sft	117		
(vi)	C.C Flooring	Sft	544		
			Total Amount (12) (Rs.)		
13	**CPS Room (12' x 12' x 12') at KMP-26 BGFIP Khaskheli Field Dasro Goth**				
(i)	Roof Screeding	Sft	272		
(ii)	Plaster	Sft	552		
(iii)	Paint	Sft	1611		
(iv)	Block / Brick Masonry	Cft	263		
(v)	Plinth Protection	Sft	189		
(vi)	C.C Flooring	Sft	144		
(vii)	M.S Door Repair	Lumpsum	1		
(viii)	M.S Louvre Vent Repair	Lumpsum	1		
			Total Amount (13) (Rs.)		

SUI SOUTHERN GAS CO. LTD.

Sui Southern Gas Co. Ltd. Procurement Dept. H.O. Iqbal

Ghulam Ali Mahar
General Manager
Projects & Construction Dept.

SECTION VIII

Renovation Works of CP Stations (16 Nos.) & Guard Rooms (02 Nos.) and New Construction of Care Taker Rooms (02 Nos.) at different locations in HQ-3 Hyderabad Section

Bill of Quantity

Item #	Description	Unit	Quantity	Rate (Rs./Qty)	Amount (Rs.)
14	**CPS Room (20' x 12' x 12') at KMP-43 BGFIP Rao Haliphot Goth**				
(i)	Roof Screeding	Sft	404		
(ii)	Plaster	Sft	872		
(iii)	Paint	Sft	2451		
(iv)	Block / Brick Masonry	Cft	260		
(v)	Plinth Protection	Sft	237		
(vi)	C.C Flooring	Sft	240		
(vii)	M.S Door Repair	Lumpsum	1		
(viii)	M.S Louvre Vent Repair	Lumpsum	1		
				Total Amount (14) (Rs.)	
15	**CPS Room (12' x 12' x 12') at KMP-72 BGFIP Khaskeli Field Dasro Goth**				
(i)	Roof Screeding	Sft	272		
(ii)	Plaster	Sft	552		
(iii)	Paint	Sft	1611		
(iv)	Block / Brick Masonry	Cft	263		
(v)	Plinth Protection	Sft	189		
(vi)	C.C Flooring	Sft	144		
(vii)	M.S Door Repair	Lumpsum	1		
(viii)	M.S Louvre Vent Repair	Lumpsum	1		
				Total Amount (15) (Rs.)	
16	**CPS Room (20' x 12' x 12') at KMP-87 BGFIP Husri**				
(i)	Roof Screeding	Sft	404		
(ii)	Plaster	Sft	872		
(iii)	Paint	Sft	2451		
(iv)	Block / Brick Masonry	Cft	260		
(v)	Plinth Protection	Sft	237		
(vi)	C.C Flooring	Sft	240		
(vii)	M.S Door Repair	Lumpsum	1		
(viii)	M.S Louvre Vent Repair	Lumpsum	1		
				Total Amount (16) (Rs.)	
				Total Amount (A) (Rs.)	
B)	**New Construction of Care Taker Rooms (02 Nos.) (Size: 10' x 10' x 10')**				
	Providing all tools, materials, equipment and labour for construction of Care Taker Room (Size: 10' x 10' x 10') at the following locations, as per Drawings (**Section-IX**), Scope of Work (**Section-III & VIII-A**), site conditions and as directed by Engineer Incharge.				
(a)	MP-274 ILBP Village Nazar Jakhro	Lumpsum	1		
(b)	MP-246-1/2 ILBP	Lumpsum	1		
				Total Amount (B) (Rs.)	
				Grand Total Amount (A+B) (Rs.)	

Ghulam Ali Mahar
General Manager
Works & Construction Dept.

Sui Southern Gas Co. Ltd. Procurement Dept. H.O. Gulshan-e-Iqbal

e-Pak Acquisition and Disposal System (EPADS) generated document | © 2025

TENDER ENQUIRY NO. SSGC/SC/14442 SECTION-3

SCHEDULE OF REQUIREMENT
AND
BID FORM

Sr. NO.	DESCRIPTION OF ITEMS / PART NOS. (1)	QUNATITY (3)	UOM (4)	TOTAL AMOUNT
1	RENOVATION WORKS OF CP STATIONS (16 NOS.) & GUARD ROOMS (02 NOS.) AT HQ-3, HYDERABAD SECTION (AS PER BOQ-SECTION-VIII) [1] SC172429 **Delivery Schedule:**	1.00	Job	
2	NEW CONSTRUCTION OF CARE TAKER ROOMS (02 NOS.) AT HQ-3, HYDERABAD SECTION (AS PER BOQ-SECTION-VIII) [2] SC172431 **Delivery Schedule:**	1.00	Job	

Fix Bid Bond Amount in PKR: 158,500

NOTE :
(i) The quoted unit price and corresponding total amount shall be inclusive of all duties & Taxes, excluding Sales Tax as per provincial laws.
(ii) Incase of supply of material alongwith services GST will be exclusive of quoted rate of material.
(iii) Bidders are essentially required for quote their rates on bid form / BoQ.
(iv) Prices given in the bid form and BOQ shall take into account all relevant factors including discounts, if any. Discount given separately at the time of bid opening will not be considered.
(v) Any Bidder who change/amend the BOQ or Price Schedule (description, quantity, uom etc.) will be render the bid as conditional bid and will be liable for rejection.

SIGNAUTRE OF BIDDER: _____
NAME.....: _____
NAME OF BIDDER....: _____
STAMP.....: _____
DATE.....: _____

Sui Southern Gas Co. Ltd. Procurement Dept. H.O. Gulshan-e-Iqbal

Oracle Financial Generat

(On Stamp Paper @ Rs.100 for first Rs.100, 000 and Rs.50 per subsequent Rs.100, 000 of Guarantee Value)

BID BOND FORMAT

Sui Southern Gas Company Limited,
ST-4/B, Sir Shah Muhammad Suleman Road,
Block 14, Gulshan-e-Iqbal,
Karachi.

Tender Enquiry No SSGC / SC /

Dear Sirs,

In consideration of Messrs _____ hereinafter called "The Bidder" having submitted the accompanying bid and in consideration of value received from _____ we hereby agree to undertake as follows:

1. To make un-conditional payment of Rupees _____ upon your return demand without further recourse, question or reference to the Bidder or any other person, in the event of the with drawl of the aforesaid Bid by the Bidder before the end of the period specified in the Bid after the opening of the same for the validity thereof, or if no such period to be specified within 120 days after said opening and or in the event that the Bidder within the period specified thereof, or if no period be specified with 15 days after prescribed forms are presented to the Bidder of signature the Bidder shall fail to execute such further contractual documents if any as may be required by the Company, or on the Bidders' failure to give the requisite Performance Bond as may be required for the fulfillment or resulting Contract with 10 days of the acceptance of the Bid.

2. To accept written intimation(s) from you as sufficient evidence of the existence of default or non compliance as aforesaid on the part of the Bidder and to make payment immediately upon receipt of the written intimation.

3. No grant of time or other indulgence to, or composition, or arrangement with the Bidder in respect of the aforesaid Bid with or without notice to us shall in any manner discharge or otherwise, however, affect this guarantee and our liabilities and commitments hereunder.

4. The guarantee shall be binding on us and our successors in interest and shall be irrevocable.

5. This guarantee shall remain valid upto _____.

Yours faithfully,

Note: Any extensions / amendments (in all guarantees/bonds) if required shall be made on stamp papers of Rs.50

Sui Southern Gas Co. Ltd. Procurement Dept. H.O. Gulshan-e-Iqbal

Sui Southern Gas Co. Ltd. Procurement Dept. H.O. Gulshan-e-Iqbal

(On Stamp Paper @ Rs.100 for first Rs.100, 000 and Rs.50 per subsequent Rs.100, 000 of Guarantee Value)

PERFORMANCE BOND FORMAT

Sui Southern Gas Company Limited,
ST-4/B, Sir Shah Muhammad Suleman Road,
Block 14, Gulshan-e-Iqbal,
Karachi.

Bank Guarantee # .....
Date of Issue : .....
Date of Expiry : .....
Amount : .....

Tender Enquiry No SSGC / SC /

Dear Sirs,

In consideration of your entering/having entered into Contract No._____ with M/s. _____ hereinafter called "The Contractor" and in consideration of value received from the Contractor, we hereby agree and undertake as follows:-

1. To make un-conditional payment of Rupees _____ and un-conditional payment in such amount as you may require from time to time as and when called upon by you to do so, not exceeding in the aggregate payment of Rupees _____, being the amount covering liquidated damaged and security for the due fulfillment by the Contractor of all liabilities, obligations, commitments and total and faithful performance of the above Contract by the Contractor as specified in the above mentioned Contract upon your written demand(s) without further recourse, question or reference to the Contractor or any other person in the event of the Contractor's default in compliance with its obligations, liabilities and faithful performance arising under and in pursuance of the Work committed by it in the above mentioned agreement of which you shall be the sole judge.

2. To accept written intimation(s) from you as sufficient evidence of the existence of default or non compliance as aforesaid on the part of the Contractor and to make payment immediately upon receipt of the written intimation.

3. To keep this guarantee in full force from the date of this guarantee till the Contractor's obligations as specified in the above referred Contract and all other obligations of the Contractor as are contained in the above contract are duly fulfilled by the Contractor to the satisfaction of the Company.

4. No grant of time or other indulgence to, or composition, or arrangement with the Contractor in respect of the performance of its obligations under and in pursuance of the said agreement or any clause thereof, with or without notice to us shall in any manner discharge or otherwise howsoever effect this guarantee and our liabilities and commitment there under.

5. The guarantee shall be binding on us and our successors in interest and shall be irrevocable.

6. This guarantee shall not be affected by any change in the constitution of the guarantor bank or the constitution of _____.

6. This guarantee shall remain valid upto _____.

Sui Southern Gas Co. Ltd. Procurement Dept. H.O. Gulshan-e-Iqbal

DECLARATION FORM

(FORMAT OF DECLARATION)

M/s. _____ [the Seller/Supplier] hereby declares its intention not to obtain or induce theprocurement of any contract, right, interest, privilege or other obligation or benefit from Sui Southern GasCompany Limited or any administrative subdivision or agency thereof or any other entity owned or controlledby Sui Southern Gas Company Limited (SSGCL) through any corrupt business practice.

Without limiting the generality of the foregoing, [the Seller/Supplier] represents and warrants that it has fullydeclared the brokerage, commission, fees, etc., paid or payable to anyone and not given or agreed to give andshall not give or agree to give to anyone within or outside Pakistan either directly or indirectly through anynatural or juridical person, including its affiliate, agent, associate, broker, consultant, director, promoter,shareholder, sponsor or subsidiary, any commission, gratification, bribe, finder's fee or kickback, whetherdescribed as consultation fee or otherwise, with the object of obtaining or inducing the procurement of acontract, right, interest, privilege or other obligation or benefit in whatsoever form from SSGCL, except thatwhich has been expressly declared pursuant hereto.

[The Seller/Supplier] certifies that it has made and will make full disclosure of all agreements andarrangements with all persons in respect of or related to the transaction with SSGCL and has not taken anyaction or will not take any action to circumvent the above declaration, representation or warranty.

[The Seller/Supplier] accepts full responsibility and strict liability for making any false declaration, notmaking full disclosure, misrepresenting facts or taking any action likely to defeat the purpose of thisdeclaration, representation and warranty. It agrees that any contract, right, interest, privilege or otherobligation or benefit obtained or procured as aforesaid shall, without prejudice to any other rights andremedies available to SSGCL under any law, contract or other instrument, be voidable at the option ofSSGCL.

Notwithstanding any rights and remedies exercised by SSGCL in this regard, [the Seller/Supplier] agrees toindemnify SSGCL for any loss or damage incurred by it on account of its corrupt business practices andfurther pay compensation to SSGCL in an amount equivalent to ten times the sum of any commission,gratification, bribe, finder's fee or kickback given by [the Seller/Supplier] as aforesaid for the purpose ofobtaining or inducing the procurement of any contract, right, interest, privilege or other obligation or benefitin whatsoever form of SSGCL.

_____

SIGNATURE & STAMP

NOTE

1. The above declaration is to be furnished along with the bid on letter head, for bid(s)amounting to total bid value of Rs. 10,000,000/- (Ten million) or above.
2. Please note that submitting the declaration is a mandatory requirement.

Sui Southern Gas Co. Ltd. Procurement Dept. H.O Gulshan-e-Iqbal

CONTRACT FORM

Contract No. SSGC/SC/

ARTICLES OF AGREEMENT

THIS AGREEMENT, made and entered into this _____ day of _____, 2018 by and between Sui Southern Gas Company Limited, having its office at ST-4/B, Sir Shah Muhammad Suleman Road, Block 14, Gulshan-e-Iqbal, Karachi, hereinafter referred to as the "Company" of the one part and M/s. _____ _____ hereinafter referred to as the "Contractor", (which expression shall include the successors, of the said firm, heirs, executives, administrators and assigns of the Partners of the said firm individually or severally) of the other part.

WITNESSETH:

WHEREAS, under the procedures, bids have heretofore been received by the Company for carrying out "_____" work and the tender of the Contractor for the said work has been accepted by the Company.

NOW THEREFORE, for and in consideration of the promises, negotiations, covenants and agreements hereunder contained and to be performed by the parties hereto, the said parties hereby covenant and agree as follows:-

Article-1 Work and Cost of the Work:

i) In consideration of the covenants and agreements to be kept and performed by the contractor and for the faithful performance of this Contract and the completion of the work embraced therein according to the specifications and conditions herein contained and referred to or agreed to in course of subsequent negotiations and in accordance with the Contract, the Company shall pay and the Contractor shall receive and accept as full compensation for everything furnish and done by the contractor under this agreement as sum of approximately **Rs.**_____ (_____), or such other sums as may be ascertained in accordance with the conditions of Contract, etc. and at rates quoted against each item of work and agreed to and accepted by the parties as one instrument, and at the times and in the manner prescribed by the conditions of the Contract.

ii) The Contractor at his own proper cost and expense shall do all work and furnish all labour, materials, tools, supplies, machinery and other equipment and plant that may be necessary for the satisfactory completion of all the works as set forth in the contract documents.

Article-2 - Time:

The maintenance of a rate of progress in the works at a rate which will result in its completion within the specified time, is of the essence of the contract and the Contractor agrees to proceed with all the due diligence and care at all times to take all precautions to ensure the timely completion as defined herein; time being deemed to be essence of the Contract of part of the Contractor.

The said work shall be started on the Contractor's receipt from the Company of a written order to proceed, and the Contractor shall have the work called for duly and fully complete in total _____. **months {including** _____ (___) **weeks** mobilization period} from the date of issuance of such order.

Article-3 - Contract Documents:

It is understood and agreed that the contract documents which comprise this Contract are attached hereto and made a part hereof and consist of the following :-

a) The Article of Agreement.

Sui Southern Gas Co. Ltd. Procurement Dept. H.O Gulshan-e-Iqbal

b) Bid ((submitted vide letter No._____, dated _____ comprising Letter of Invitation, Instructions to bidders, Scope of Work, Special and General Conditions of Contract, Tender Form, Bill of Quantities, Drawings, etc.).

c) **Company letter No._____, dated _____.**

Contractor letter No._____, dated _____.

d) **Notice of Award (Letter of Intent (LOI) No.SSGC/MAT/S&C/_____, dated _____.**

e) **Acceptance by the Contractor on the copy of LOI.**

f) **Letter to Proceed No.SSGC/PROC/S&C/_____, dated _____.**

g) **Performance Bank Guarantee No._____, dated _____, amounting to Rs._____ issued by M/s. _____.**

It is agreed by the parties to the contract that this contract shall be executed in two counterparts; one copy to be retained in the office of the Sui Southern Gas Company Limited and one given to the Contractor.

IN WITNESS WHEREOF the parties hereto have executed this Contract at Karachi in two counterparts by their duly authorized representatives as of the day and year herein above set forth.

Signed for and on behalf of
M/s. Sui Southern Gas Company Limited
_____.

Signature : _____

Name : _____

Signed for and on behalf of
M/s. _____ Karachi

Signature : _____

Name : _____

In the presence of :

Signature : _____

Name : _____

Signature : _____

Name : _____

Signature : _____

Name : _____

Sui Southern Gas Co. Ltd. ★ H.O. Gulshan-e-Iqbal ★ Procurement Dept.

Supplier code: _____

FORM-X

Bank account details form for all Beneficiaries

(Mandatory requirement for Digital Online Banking)

As per FBR Regulations ref # C.No.4 (24) IT-Budget/2021-142150-R dated 23rd Sept'2021 to make the payment online w.e.f. 01-11-2021. All beneficiaries are required to fill in the below details, which is mandatory:

Name of Firm: _____

Address of Firm: _____

_____

CNIC #: _____

NTN #: _____

Bank Name: _____

Bank A/C Title name: _____

Branch code: _____

Bank A/c #: _____ (16 Digits)

Bank IBAN #: _____ (24 Digits)

☐ Information already submitted.

Note: Please be attached copy of Cheque / Account Maintenance Certificate.(Mandatory)

Sui Southern Gas Co. Ltd. Procurement Dept. H.O. Gulshan-e-Iqbal

_____

Authorized Sign & Stamp

Date:_____

Note: All payments transactions will be made on above mentioned Account details. This is only a one time information to be provided by the all beneficiaries. Incase if the above detail has already submitted, please tick the box above "Information already submitted" and also ensure Form-X is duly signed & stamped.

ANNEXURE: I

Declaration of Ultimate Beneficial Owners Information for Public Procurement Contracts.

1. Name
2. Father's Name/Spouse's Name
3. CNIC / NICOP/Passport No.
4. Nationality
5. Residential address
6. Email address
7. Date on which shareholding, control or interest acquired in the business.
8. In case of indirect shareholding, control or interest being exercised through intermediary companies, entries or other legal persons or legal arrangements in the chain of ownership or control, following additional particulars to be provided:

1	2	3	4	5	6	7	8	9	10
Name	Legal form (Company/Limited Liability Partnership /Association of Persons/Single Member Company/Partnership Firm/Trusted/Any other Individual, Body Corporate (to be Specified)	Date of Incorporation / Registration	Name of Registering Authority	Business Address	Country	Email Address	Percentage of shareholding control or interest of BO in the Legal Person or Legal Arrangement	Percentage of shareholding, Control or Interest of Legal Person or Legal Arrangement in the Company	Identity of Natural Person who Ultimately owns or Controls the Legal Person or Arrangement

9. Information about the Board of Directors (details shall be provided regarding number of shares in the capital of the company as set opposite respective names).

Sui Southern Gas Co. Ltd. ★ H.O. Gulshan-e-Iqbal ★ Procurement Dept.

1	2	3	4	5	6	7	8
Name and surname (in block Latter's)	CNIC no (in case of foreigner Passport No)	Father's / Husband's Name in Full	Current Nationally	Any other Nationality lies)	Occupation	Residentially address in full of the registered / principle office address for a subscribers other that natural Person	Numbers of shares taken by cash subscribers (in figures and words
			Total numbers of shares taken (in figures and words)				

10. Any other information incidental to or relevant to beneficial owner(s).

Name and signature
(Person authorized to issue notice on behalf of the company)

Sui Southern Gas Co. Ltd. Procurement Dept. H.O. Gulshan-e-Iqbal

Form of Bid-Securing Declaration

[The Bidder shall fill in this Form in accordance with the instructions indicated.]

Date: *[date (as day, month and year)]*
Bid No.: *[number of Bidding process]*
Alternative No.: *[insert identification No if this is a Bid for an alternative]*

To: *[complete name of Procuring Agency]*

We, the undersigned, declare that:

We understand that, according to your conditions, Bids must be supported by a Bid-Securing Declaration.

We accept that we will be blacklisted and henceforth cross debarred for participating in respective category of public procurement proceedings for a period of (not more than) six months, if fail to abide with a bid securing declaration, however without indulging in corrupt and fraudulent practices, if we are in breach of our obligation(s) under the Bid-conditions, because we:

(a) have withdrawn our Bid during the period of Bid validity specified in the Letter of Bid; or

(b) having been notified of the acceptance of our Bid by the Procuring Agency during the period of Bid validity, (i) fail or refuse to sign the Contract; or (ii) fail or refuse to furnish the Performance Security (or guarantee), if required, in accordance with the ITB.

We understand this Bid Securing Declaration shall expire if we are not the successful Bidder, upon the earlier of (i) our receipt of your notification to us of the name of the successful Bidder; or (ii) twenty-eight days after the expiration of our Bid.

Name of the Bidder* _____

Name of the person duly authorized to sign the Bid on behalf of the Bidder** _____

Title of the person signing the Bid _____

Signature of the person named above _____

Date signed _____ day of _____

*: In the case of the Bid submitted by joint venture specify the name of the Joint Venture as Bidder

**: Person signing the Bid shall have the power of attorney given by the Bidder attached to the Bid

[Note: In case of a Joint Venture, the Bid-Securing Declaration must be in the name of all members to the Joint Venture that submits the Bid.]

Sui Southern Gas Co. Ltd. Procurement Dept. H.O. Gulshan-e-Iqbal

SUI SOUTHERN GAS COMPANY LIMITED

UNDERTAKING OF COMPLIANCE WITH INTEGRATED MANAGEMENT SYSTEM (IMS) MANUAL AND BLACKLISTING MECHANISM

I, _____ [Supplier's Authorized Representative Full Name], of _____ [Supplier Company Name], with principal office located at _____ [Full Address], do hereby solemnly affirm and declare as follows:

1. That I am the duly authorized representative of _____ [Supplier Company Name], and have the legal authority to make this declaration on behalf of the company.
2. That I confirm having accessed, read, and fully understood the **Integrated Management System (IMS) Manual** provided by **Sui Southern Gas Company Limited (SSGC)**, available at the official website: https://www.ssgc.com.pk/web/wp-content/uploads/2025/06/IMS-Mannual-1-1.pdf
3. That _____ [Supplier Company Name] agrees to comply fully with all the policies, procedures, and responsibilities outlined in the IMS Manual, and will ensure that all relevant employees, contractors, and agents are made aware of and comply with the same.
4. That _____ [Supplier Company Name] acknowledges that failure to comply with the IMS Manual may result in corrective action, including but not limited to financial penalties as per SSGC policy and suspension or termination of business with Sui Southern Gas Company Limited (SSGC).
5. That the bidder has also read, understood, and accepted the **Blacklisting Mechanism of Sui Southern Gas Company Limited (SSGC)**, available at: https://www.ssgc.com.pk/web/wp-content/uploads/2024/09/blacklisting_mechanism_2024.pdf
6. Any type of violation of the tender terms and non-performance will result in the enforcement of the Blacklisting Mechanism, which will be dealt with in accordance with the Blacklisting Rules/Mechanism.
7. This affidavit is made in good faith and for the purpose of affirming our commitment to health, safety, environmental standards, and compliance with the **Integrated Management System (IMS) Manual** and the **Blacklisting Mechanism** of Sui Southern Gas Company Limited (SSGC), as well as all other applicable policies and procedures of SSGC.

Signed at _____ [City] on this _____ day of _____, *20* .

Signature: _____
Name: _____
Designation: _____
Company Name: _____
Contact Details: _____

(Company Stamp / Seal Mandatory)

Witnessed by:

Signature of Witness: _____
Name of Witness: _____
Date: _____

Signature of Witness: _____
Name of Witness: _____
Date: _____

Sui Southern Gas Co. Ltd. Procurement Dept. H.O. Gulshan-e-Iqbal

SSTW-05

Ref No _____ Dated _____

M/s _____

SNTN _____

Address _____

NOTICE UNDER RULE 3(1) OF THE SINDH SALES TAX SPECIAL PROCEDURE (WITHHOLDING) RULES, 2011.

Dear Sir,

Kindly note that we are a withholding agent under the Sindh Sales Tax Special Procedure (Withholding) Rules, 2011, and that we shall withhold and deduct the prescribed amounts of Sindh sales tax against your tax invoices in relation to the services provided or rendered by you to us. We hold NTN/FTN .....

2. We undertake to deposit the withheld/deducted amounts of Sindh sales tax in the Sindh Government's head of account "B-02384" against a SRB-prescribed PSID/Challan (SST-04 or SSTW-04) in the manner prescribed under the aforesaid Sindh Sales Tax Special Procedure (Withholding) Rules, 2011, and we shall provide you a certificate of deduction-cum-deposit in terms of rule 3(9) thereof.

Signature _____

Name _____

CNIC _____

Designation _____

Date _____

Official seal _____

Sui Southern Gas Co. Ltd. Procurement Dept. H.O Gulistan-e-Jauhar

Sui Southern Gas Company Limited

Procurement Department

Standard Advisory to all Bidders

SUB: Sindh Sales Tax Withholding On Services Payment

(Effective from 1 July 2024)

Dear Sir,

Background

Please be informed that:

1. Uptil February 2024, SSGC deducted 20% of Sindh Sales Tax amount from Invoice value payable to a Vendor for services rendered in Sindh & deposit the same with Sindh Revenue Board, while remaining 80% is deposited by the Vendor themselves.

2. From March 2024 – June 2024, SSGC deducted 80% of Sindh Sales Tax amount from Invoice value payable to a Vendor for services rendered in Sindh & deposit the same with Sindh Revenue Board, while remaining 20% is deposited by the Vendor themselves

Amendment in Law

Sindh Revenue Board (SRB) has amended Withholding Rules thereby requiring SSGC to deduct 20% of sales tax amount from Invoice Value.

Revised Procedure for Sindh Sales Tax Withholding

In order to ensure implementation of above amendment, following process is being implemented 01. July 2024:

1) 80% Sales Tax to continue to be withheld on 'Past" Invoices only (where Vendor has already deposited 20% Sales Tax in Government treasury provides evidence thereof).

2) 20% Sales Tax will be deducted on Current and future invoices (while 80% will be deposited by vendor directly with SRB)

It is needless to mention that only Sindh Withholding Rules have been amended white there is no change in other Rules (income tax withholding Balochistan Sales Tax withholding; etc.)

Sui Southern Gas Co. Ltd. ★ H.O. Gulshan-e-Iqbal ★ Procurement Dept.

SSGC

سوئی سدرن گیس کمپنی لمیٹڈ
پروکیورمنٹ ڈیپارٹمنٹ

تمام ٹھیکیداروں کے لئے معیاری ایڈوائزری

خدمات کی ادائیگی پر سندھ سیلز ٹیکس
(۱ جولائی ۲۰۲۴ سے نافذ العمل)

<u>پس منظر</u>

مطلع کیا جائے کہ:

1. فروری 2024 تک، SSGC نے سندھ میں فراہم کی جانے والی خدمات کے لیے وینڈرز کی انوائس ویلیو سے سندھ سیلز ٹیکس کی رقم کا 20% کاٹ لیا ہے اور اسے سندھ ریونیو بورڈ کے پاس جمع کرایا ہے، جبکہ وینڈرز بقیہ 80% خود جمع کراتے ہیں۔

2. مارچ 2024 سے جون 2024 تک، SSGG نے سندھ میں فراہم کی جانے والی خدمات کے لیے وینڈرز کی انوائس ویلیو سے سندھ سیلز ٹیکس کی رقم کا 80% کاٹ لیا ہے اور اسے سندھ ریونیو بورڈ کے پاس جمع کرایا ہے، جبکہ بقیہ 20% وینڈرز خود جمع کراتے ہیں۔

<u>قانون میں ترمیم</u>

سندھ ریونیو بورڈ (SRB) نے ود ہولڈنگ رولز میں ترمیم کی ہے جس کے تحت SSGC کو انوائس ویلیو سے سیلز ٹیکس کی رقم کا 20% کٹوتی کرنا ہوگی۔

<u>سندھ سیلز ٹیکس ودہولڈنگ کا نظرثانی شدہ طریقہ کار</u>

مندرجہ بالا ترمیم کے نفاذ کو یقینی بنانے کے لیے، 01 جولائی 2024 سے درج ذیل عمل کو نافذ کیا جا رہا ہے:

1) 80% سیلز ٹیکس صرف 'ماضی' انوائسز پر کٹوتی جاری رہے گی (جہاں وینڈر نے پہلے ہی سرکاری خزانے میں 20% سیلز ٹیکس جمع کرایا ہے اس کا ثبوت فراہم کرتا ہے)۔

2) 20% سیلز ٹیکس موجودہ اور مستقبل کے انوائسز پر کاٹا جائے گا (جبکہ 80% وینڈر براہ راست SRB کے ساتھ جمع کرائے گا)

یہ واضح رہے کہ صرف سندھ ودہولڈنگ رولز وائٹ میں ترمیم کی گئی ہے دیگر رولز (انکم ٹیکس ودہولڈنگ بلوچستان سیلز ٹیکس ود ہولڈنگ وغیرہ) میں کوئی تبدیلی نہیں کی گئی ہے۔

Sui Southern Gas Co. Ltd. ★ H.O. Gulshan-e-Iqbal ★ Procurement Dept.

SECTION – IX

DRAWINGS

Sui Southern Gas Co. Ltd. Procurement Dept. H.O. Gulshan-e-Iqbal

PUBLIC PROCUREMENT REGULATORY AUTHORITY (PPRA) EPADS

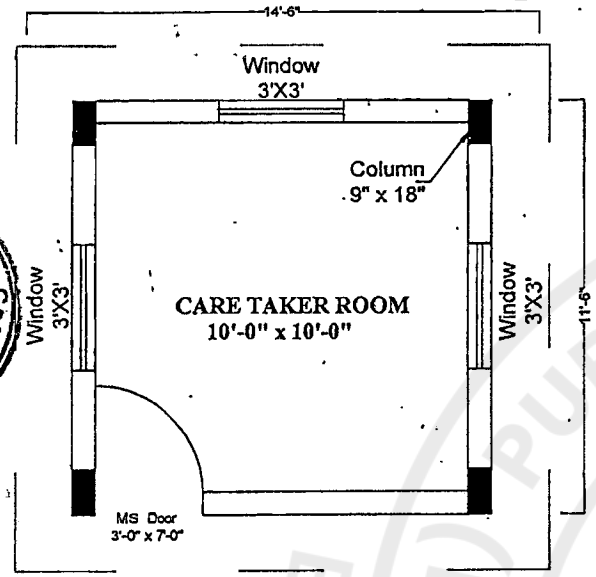

PLAN

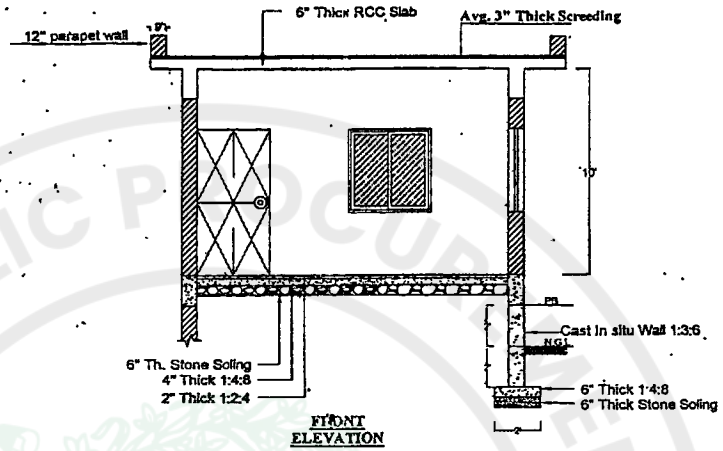

FRONT ELEVATION

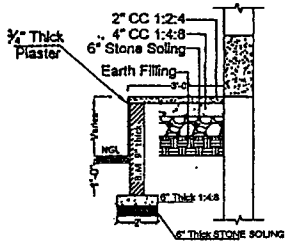

PLINTH PROTECTION

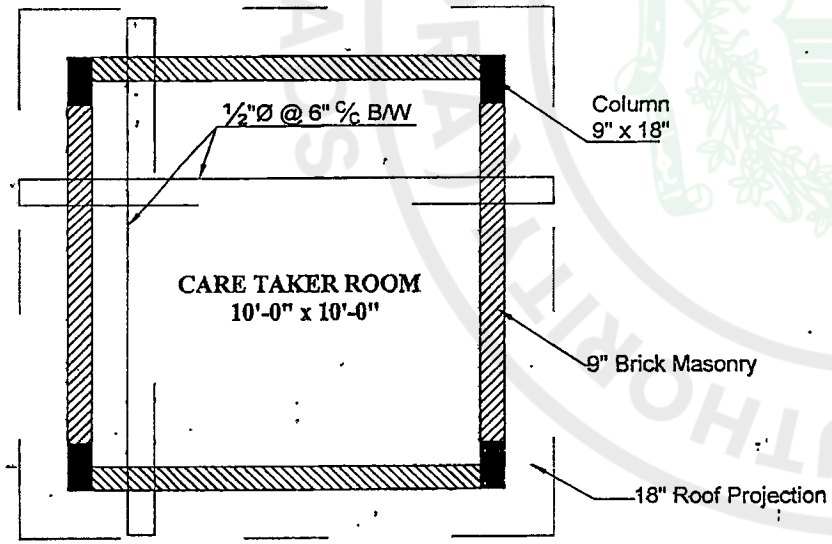

ROOF SLAB

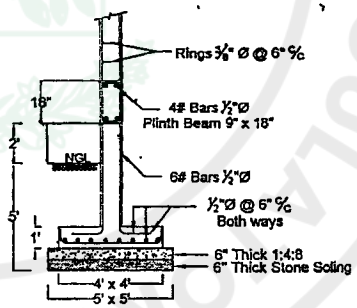

TYPICAL COLUMN FOUNDATION

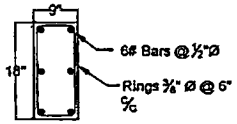

COLUMN

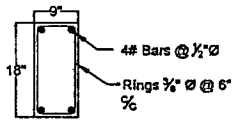

PLINTH BEAM

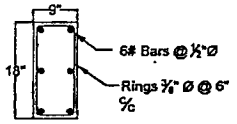

ROOF BEAM

SSGC	P & C CENTRE CAD	SUI SOUTHERN GAS COMPANY LIMITED PROJECTS & CONSTRUCTION DEPARTMENT	Prepared By: Muhammad Irfan	Architectural Design:	DWG No.
		Sheet Title CONSTRUCTION OF CARE TAKER ROOM	Date: 2026	. Ali Gohar Abro (Engr)	Sheet No.

Sui Southern Gas Co. Ltd. ★ H.O. Gulshan-e-Iqbal ★ Procurement Dept.

Ghulam Ali Bahar
General Manager
Projects & Construction Dept

PUBLIC PROCUREMENT REGULATORY AUTHORITY
EPADS

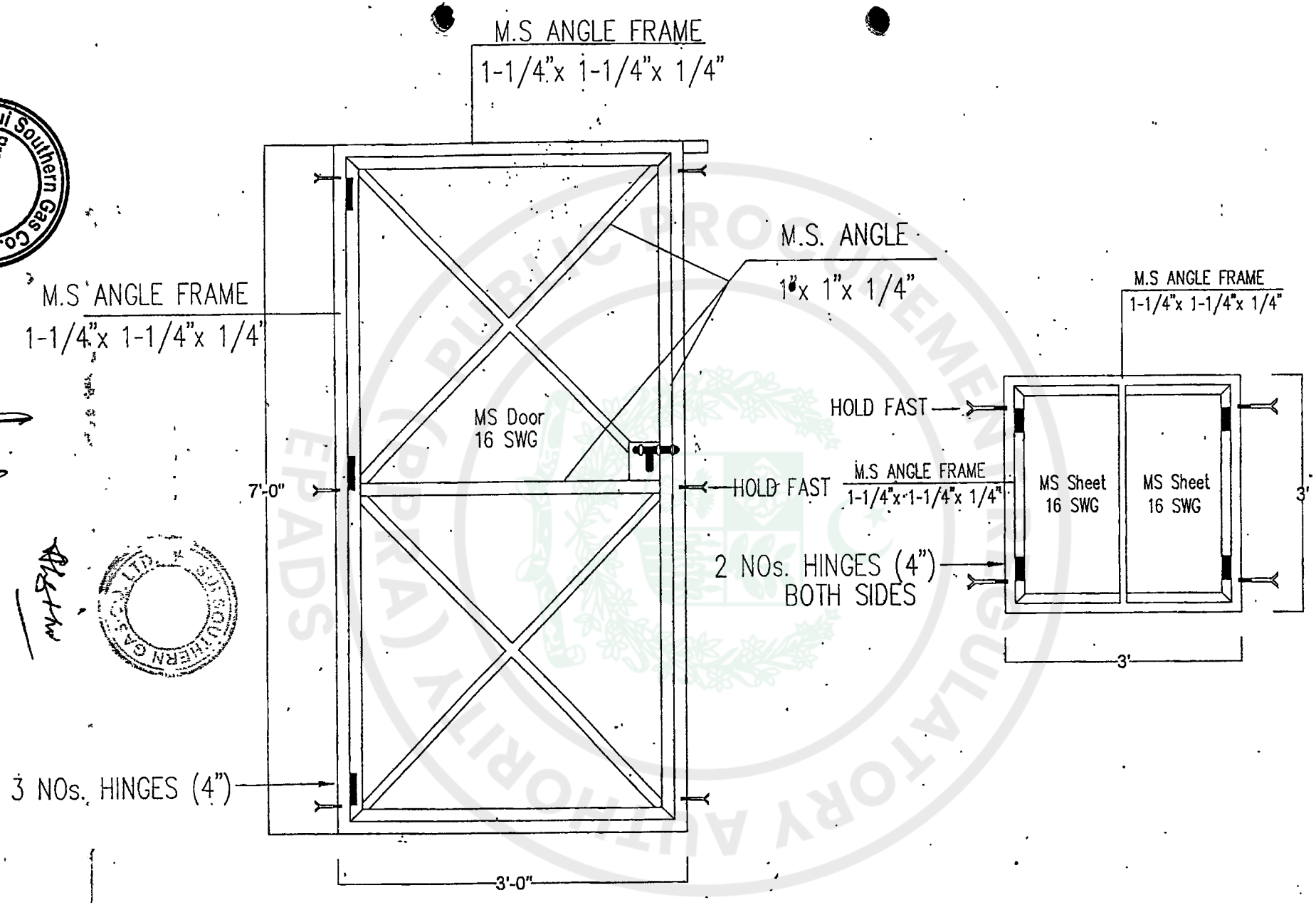

SSGC	P & C CENTRE CAD	SUI SOUTHERN GAS COMPANY LIMITED PROJECTS & CONSTRUCTION DEPARTMENT	Prepared By: Muhammad Irfan	Architectural Design:	DWG No.
		Sheet Title CONSTRUCTION OF CARE TAKER ROOM	Date: 2026	Ali Gohar Abro (Engr)	Sheet No.

Sui Southern Gas Co. Ltd. ★ H.O. Gulshan-e-Iqbal ★ Procurement Dept

Ghulam Ali Mahar
General Manager
Projects & Construction Dept

PUBLIC PROCUREMENT REGULATORY AUTHORITY (PPRA) EPADS

SECTION –I-B

Technical Qualification of Construction Firms / Contractors

Renovation Works of CP Stations (16 Nos.) & Guard Rooms (02 Nos.) and New Construction of Care Taker Rooms (02 Nos.) at different locations in HQ-3 Hyderabad Section

Tender Reference No. CIV-CC-P&C-2K2628

MANDATORY REQUIREMENTS
a) Registration with PEC for category C-6 and above having sub category CE-10
b) Registration with Sindh Board of Revenue (SBR)
c) Banker's Confidential Certificate, direct from Bank (not older than last 3 months from date of bid submission)
d) Income Tax Assessment Order or Income Tax Clearance Certificate (**Last Three Years**).
e) Audit Report for the last **three (03) years** from Government Registered Reputed Audit Firm.

Evaluation Criteria for Technical Qualification

S.No.	CRITERION	OVERALL (Max Marks)
1	Firm's Experience	50
2	Technical Staff	10
3	Instrument / Equipment & Tools Owned / Rented by the Firm	10
4	Registration/Office Facilities	05
5	Financial Stability	25
	Total Numbers	**100**

For the purpose of quantitative evaluation, the above five criteria have been further sub-divided as under:

	CRITERION	OVERALL (Max Marks)
1	**Firm' s Experience**	**50**
	Relevant Experience of Firms with Similar Works/Projects of Last 08 Years	
i)	7.5 marks for each work more than Rs. 05 million. (Max 2 Projects)	15
ii)	05 marks for each work more than Rs. 04 million. (Max 3 Projects)	15
iii)	03 marks for each work more than Rs. 03 million. (Max 4 Projects)	12
iv)	02 marks for each work more than Rs. 02 million. (Max 4 Projects)	08

	CRITERION	OVERALL (Max Marks)
2	**Technical Staff:**	**10**
i)	Project Engineer (Min B.E / B.Sc. (Civil Engineers) registered with PEC (Experience more than 05 years) (3 marks each)	03
ii)	Site Engineer (Min B.E / B.Sc. (Civil Engineers) registered with PEC (Experience more than 03 years) (2 marks each)	02
iii)	Associate Civil Engineers/ D.A.E (Civil) (Experience more than 3 years) (2 marks each)	02
iv)	Surveyor (Min DAE Civil) (Experience more than 3 years) (2 marks each)	02
v)	Accountant / Computer Operator / Clerk Staff (1 mark each)	01

Sui Southern Gas Co. Ltd. Procurement Dept. H.P. Gulshan-e-Iqbal

Ghulam Ali Mahar
General Manager
Projects & Construction Dept.

SUI SOUTHERN GAS CO. LTD.

	CRITERION	OVERALL (Max Marks)
3	**Instrument / Equipment & Tools Owned / Rented by the Firm**	**10**
i)	Excavator (Hydraulic/Backhoe) (2 marks each)	02
ii)	Vibrator Roller Compactor (1 marks each)	01
iii)	Wheel barrow (1 marks each)	01
iv)	Mixer Machine (1 marks each)	01
v)	Bulldozer (1 marks each)	01
vi)	Dump Truck (1 mark each)	01
vii)	Water Tanker (1 mark each)	01
viii)	Plate Compactor (1 mark each)	01
ix)	Transport Vehicles (1 mark each)	01

	CRITERION	OVERALL (Max Marks)
4	**Registration / Office Facilities**	**05**
i)	Office Facility in Karachi (1.5 marks each)	1.5
ii)	Porta Cabin (Detail with proof of ownership / Rent) (1.5 marks each)	1.5
iii)	Computers (1 mark each)	01
iv)	Landline Telephone/Mobile Facility (0.5 mark each)	0.5
v)	Email Facility (0.5 mark each)	0.5

	CRITERION	OVERALL (Max Marks)
5	**Financial Stability**	**25**
5.1	**Annual Turnover for Last Year (Each Year)**	
i)	Annual Turnover above PKR 10 Million	15
ii)	Annual Turnover between PKR 08 to 10 Million	10
iii)	Annual Turnover between PKR 06 to 08 Million	07
iv)	Annual Turnover between PKR 04 to 06 Million	03
5.2	**Cash in Hand / Bank**	
i)	Cash in Hand/Bank above PKR 07 Million	10
ii)	Cash in Hand/Bank between PKR 05 to 07 Million	07
iii)	Cash in Hand/Bank between PKR 03 to 05 Million	05
iv)	Cash in Hand/Bank between PKR 01 to 03 Million	03

Note:

1. Minimum Qualifying marks = 65
2. Documentary evidence against each field of marking criteria may be verifiable without which marks will not be awarded.
3. CVs/Resumes and PEC certificate of Engineer must be provided else no marks will be awarded.
4. Contractor must provide affidavit that all rented / owned equipment and tools will be readily available at site as per instruction of engineer incharge.

Sui Southern Gas Co. Ltd. Procurement Dept. H.O. Gulshan-e-Iqbal

EVALUATION OF APPLICATION FOR TECHNICAL QUALIFICATION

1. The firm/contractor must submit a valid PEC registration for the last fiscal year (2025-26).
2. SSGC may request additional information, or documents in support of information submitted by the firm/contractor.
3. The decision of SSGC to accept or reject any application for technical qualification will be final.
4. The firm desiring to be technically qualified must have suitable machinery & equipment and qualified experienced manpower to handle the subject project.
5. Application for technical qualification of each applicant will be compared with a predetermined set of values and Minimum Qualifying marks = 65.

Sui Southern Gas Co. Ltd. Procurement Dept. H.O. Gulshan-e-Iqbal

FORM-I: LETTER OF APPLICATION

Registered Business Name: _____
Registered Business Address: _____
Telephone: _____
Fax: _____

General Manager (Procurement)
Procurement Department,
Sui Southern Gas Company Limited,
Sir Shah Suleman Road,
Gulshan-e-Iqbal
Karachi-75300

Sui Southern Gas Company Limited

Renovation Works of CP Stations (16 Nos.) & Guard Rooms (02 Nos.) and New Construction of Care Taker Rooms (02 Nos.) at different locations in HQ-3 Hyderabad Section

Tender Ref No. CIV-CC-P&C-2K2628

1. We hereby apply to be qualified with Sui Southern Gas Company Limited; as Engineering Firms/Contractors for execution of the above-mentioned work.

2. We authorize SSGC or its authorized representative to conduct any investigation to verify the statements, documents and information's submitted and to clarify the financial and technical aspects of this application from any person, bank, department, agency or firm.

3. The names and positions of contact persons who may be contacted for further information's, if required, are as follows:

a) _____
b) _____
c) _____

4. We declare that;

(An affidavit on Judicial / Stamp Paper of Rs. 50/- will be submitted giving the followings)

i) The statements made and the information provided in the application are complete, true and correct in every respect.
ii) This firm has never been black listed by any Government department, Semi government Authority or Private Company or Corporation and not involved in litigation/arbitration with any client. (In case of any involvement in litigation/ arbitration, details should be furnished)

Respectfully,
(Authorized representative of applicant)
Date : _____

Sui Southern Gas Co. Ltd. Procurement Dept. H.O. Gulshan-e-Iqbal

FORM-II: GENERAL INFORMATION

Company Name : _____

_____

1. Head Office Address: _____

   Telephone No. _____

   Fax No. _____

   E-mail: _____

2. Karachi Office Address: _____

   Telephone No. _____

   Fax No. _____

   E-mail: _____

3. Year incorporated: _____

Note: Documentary evidence (where required) is mandatory requirement and to be submitted with the bid else no marks will be awarded.

- Attach copy of certificate of registration and ownership
- State whether office premises used solely by applicant. If shared give names of other firms.

Sui Southern Gas Co. Ltd. Procurement Dept. H.O. Gulshan-e-Iqbal

PUBLIC PROCUREMENT REGULATORY AUTHORITY (PPRA) EPADS

FORM-III: **DETAILS OF COMPLETED SIMILAR TYPE OF CONSTRUCTION PROJECTS / WORKS IN THE LAST EIGHT (08) YEARS**

Name of Work : _____

Scope & Details of Work : _____

Total Value of Project : _____

Value of work being executed by the applicant: _____

Name of Client : _____

Address of Client : _____

Telephone of Client : _____

Date of Award of Work : _____

Start Date : _____

Scheduled Completion Date : _____

Actual Completion Date: _____

Note:

- **All the information provided shall be supported with documentary evidence otherwise no credit / points will be given. Required attachments (documentary evidence etc.) should be clearly marked as Attachment 1 to Page of Form-III or Attachment 2 to Page ... of Form-III**
- **Please fill one form for each work/project**

SUI SOUTHERN GAS CO. LTD.

Sui Southern Gas Co. Ltd. Procurement Dept. H.O. Gulshan-e-Iqbal

PUBLIC PROCUREMENT REGULATORY AUTHORITY (PPRA) EPADS

FORM-IV: **DETAILS OF PERMANENT KEY STAFF WITH THE FIRM/CONTRACTOR**

Name	Designation	Education/ Qualification	Years of Experience	Date of Appointment with Applicant	Present Designation with Applicant	College/University Last Attended

Note:

- Resume (CV) along with registration of PEC (in case of Engineer) / certificate from Board of technical education (in case of DAE) shall be enclosed; otherwise no credit/points will be given.
- Documentary evidence (where required) is mandatory requirement and to be submitted with the bid else no marks will be awarded.

Sui Southern Gas Co. Ltd. Procurement Dept. H.O. Gulshan-e-Iqbal

FORM-V: **DETAILS OF RELEVANT EQUIPMENT/ MACHINERY / TOOLS OWNED BY THE FIRM/ CONTRACTOR**

Sr. No.	Description	Nos. of Each	Owned Or Leased	Year of Purchase	Capacity/ Performance / Size	Present Location

Note: The bidder has to provide undertaking that the above equipment will be made available at project site within the mobilization period. The information provided shall be supported with documentary evidence where required, otherwise no credit/points will be given.

Sui Southern Gas Co. Ltd. Procurement Dept. H.O. Gulshan-e-Iqbal

FORM – VI: Registration / Office Facility

Dump yard (Atleast 400 Sft Proof of Ownership) : _____

Computer Facilities (List Items) : _____

Pre-Qualification With Other Organizations: _____

(1) _____

(2) _____

(3) _____

EOBI Registration _____

PUBLIC PROCUREMENT REGULATORY AUTHORITY (PPRA) EPADS

Sui Southern Gas Co. Ltd. Procurement Dept. H.O. Gulshan-e-Iqbal

FORM – VII: Financial Stability

Firm/Contractor applying for technical qualification shall submit the following certificates / registration / statements.

D. Financial Stability

- Attachment of Last Fiscal Year Turnover
- Attachment with details of Cash in hand

Firm/Contractor applying for technical qualification shall also submit the following certificates / registration / statements.

a) Banker's Certificate

A confidential current Banker's reference/certificate in respect of bidder's financial soundness to be submitted directly by the bank to SSGC in a sealed envelope. If more than one banker, reference/ certificate from each is required.

b) Audit Report for the last **three (03) years** from Government Registered Reputed Audit Firms.

c) Income Tax assessment for last (03) three financial years and/or Income Tax Clearance Certificate.

Note: In order to be eligible for assignment of marks, Documentary evidence needs to be attached.

Sui Southern Gas Co. Ltd. Procurement Dept. H.O. Gulshan-e-Iqbal

Sui Southern Gas Company Limited

Ref: SSGC/SC/PT/EPADS2/14442-Ext / 2026
Date 25 September 2026

Extension # 1

RENOVATION WORKS OF CP STATIONS (16 NOS.) & GUARD ROOMS (02 NOS.) AT HQ-3, HYDERABAD SECTION

Tender Enquiry No. SSGC/SC/PT/EPADS2/14442

Dear Sir,

This refers to above mentioned tender enquiry, the bid submission / opening date has been extended up to **"08 October 2026 at 1130 Hrs."** instead of existing.

All other terms & conditions will remain unchanged.

Inconvenience caused is highly regretted please.

For General Manager (Procurement)

Sui Southern Gas Co. Ltd. Procurement Dept. H.O. Gulshan-e-Iqbal

SSGC House, Sir Shah Suleman Road, Gulshan-e-Iqbal, P.O Box 17989, Karachi-75300
Ph: +92-21-9902-1279,1223,1231 Fx: +92-21-99231583 Web: www.ssgc.com.pk
Email : mmte@ssgc.com.pk