Standard Bidding Document

SSGC/LP/EPADS2/NR/2189309-2 (HARDWARE MATERIAL FOR WORKSHOP)
(Goods)

National

Single Stage-One Envelope

CORRIGENDUM # 2	CORR-P167424-002
Initiation Date	October 29, 2026

November 02, 2026

SSGC (PROCUREMENT DEPARTMENT),DCM
ST-4/B, Block 14, Sir Shah Suleman Road, Gulshan-e-Iqbal, Karachi, Pakistan
Phone: +92-322-821-4899, Email: MMTE@SSGC.COM.PK

Table of Contents

REQUEST FOR BIDS 1

Instructions to Bidders 3

Bid Data Sheet 24

Bids Data Sheet (BDS) 25

Eligibility Criteria 30

Evaluation Criteria 31

Items/Lots 32

Related Services of Goods: 33

Items/Lot Specification 34

Price Schedule 36

General Conditions of Contract 38

Special Conditions of Contract 49

Bid Securing Declaration 54

Contract Form 56

Integrity Pact 59

Performance Guarantee Form 61

Annexure 64

SSGC/LP/EPADS2/NR/2189309-2 65

Procurement Forms 66

Historical Contract Non-Performance, and Pending Litigation and Litigation History 1

Additional Forms and Documents 69

REQUEST FOR BIDS

PROCUREMENT OF GOODS

1. The **SSGC (PROCUREMENT DEPARTMENT)** has reserved Funds for the procurement planned for FY **2026-27**. The **SSGC (PROCUREMENT DEPARTMENT)** intends to apply part of the proceeds of this Fund to cover eligible payments under the contract for the " **SSGC/LP/EPADS2/NR/2189309-2 (HARDWARE MATERIAL FOR WORKSHOP)**" with the reference of **"P167424"**

2. The **SSGC (PROCUREMENT DEPARTMENT)** invites sealed Bids from eligible Bidders for procurement of goods described in the bidding documents on **EPADS v2.0**.

3. **Single Stage-One Envelope** will be used by adopting **Least Cost Based Selection (LCBS)** Technique for the subject procurement, in line with the Public Procurement Rules, 2026 and any Regulations, Regulatory Guides, Procurement Guidelines or Instructions issued by the Authority from time to time.

4. All Bids must be accompanied by a Bid Security amount described in Bid Security Section in Bidding Document in the form of **Pay Order, Call at Deposit, Bank Guarantee** or all bids must be accompanied by bid securing declaration in the format specified in the Bidding documents

5. E-Bidding documents, containing detailed terms & conditions, specifications and requirements etc. are available on **e-Pak Acquisition and Disposal System (EPADS)** at **https://epads.gov.pk/opportunities/federal/procurements/167424** for all the interested bidders registered on **EPADS v2.0**. Bidders are required to get themselves registered on **EPADS v2.0** to participate in Bidding process.

6. The e-bids, prepared in accordance with the instructions in the e-Bidding Documents, must be submitted through **EPADS v2.0** on or before **Tuesday, November 10, 2026 10:00 AM**. E-bids will be opened using **EPADS v2.0** on the same day at **Tuesday, November 10, 2026 10:30 AM**. Manual submission of Bids shall not be entertained. Those vendors who have not yet

registered on the new version of **EPADS v2.0,** may register themselves on **https://vendors.epads.gov.pk/**. A tutorial to explain the registration process is available at **https://www.youtube.com/watch?v=MNW6T38v7tc**

In terms of Rule 65 of Public Procurement Rules, 2026 Grievance Redressal Committee (GRC) is notified for the subject procurement and notification copy is available on the procuring agency's website and on Authority's website at (**www.ppra.gov.pk**).

SSGC (PROCUREMENT DEPARTMENT), DCM
ST-4/B, Block 14, Sir Shah Suleman Road, Gulshan-e-Iqbal, Karachi, Pakistan
+92-322-821-4899
MMTE@SSGC.COM.PK

Instructions to Bidders

A. Introduction

1.Scope of Bids

1.1 The Procuring Agency (PA), as indicated in the **Bids Data Sheet (BDS)** invites Bids **through EPADS v2.0** for the provision of Goods as specified in the BDS and **in Section V – Evaluation Criteria, Specifications & Schedule of Requirements**. The name, identification, and number of items/deliverables are provided in the **BDS**. The successful Bidders will be expected to provide the goods within the specified period and timeline(s) as stated in the **BDS**.

2. Source of Funds

2.1 Source of funds is referred in Clause-2 I of Invitation for Bids.

3. Eligible Bidders

3.1 A Bidder may be natural person, company or firm or public or semi-public agency of Pakistan or any foreign country**,** or any combination of them with a formal existing agreement (on Judicial Papers) in the form of a joint venture, consortium, or association. In the case of a joint venture, consortium, or association, all members shall be jointly and severally liable for the execution of the Contract in accordance with the terms and conditions of the Contract. The joint venture, consortium, or association shall nominate a Lead Member as nominated in the BDS, who shall have the authority to conduct all business for and on behalf of any and all the members of the joint venture, consortium, or association during the Bidding process, and in case of award of contract, during the execution of the contract.

Verifiable copy of the agreement that forms a joint venture, consortium or association shall be required to be submitted as part of the Bid.

The appointment of Lead Member in the joint venture, consortium, or association shall be confirmed by submission of a valid Power of Attorney to the Procuring Agency.

Any bid submitted by the joint venture, consortium or association shall indicate the part of proposed contract to be performed by each party and each party shall be evaluated (or post qualified if required) with respect to its contribution only, and the responsibilities of each party shall not be substantially altered without prior written approval of the Procuring Agency and in line with any

instructions issued by the Authority.

(The limit on the number of members of JV or Consortium or Association may be prescribed in BDS, in accordance with the guidelines issued by the PPRA).

3.2 The invitation for Bids is open to all prospective suppliers, manufacturers, or authorized agents / dealers subject to any provisions of incorporation or licensing by the respective national incorporating agency or statutory body established for that particular trade or business. Procuring agencies shall specify the registration/licensing requirements for the foreign bidders keeping in view the requirement of that business.

3.3 A Bidder shall not have a conflict of interest. All Bidders found to have a conflict of interest shall be disqualified. A Bidder may be considered to have a conflict of interest with one or more parties in this Bidding process, if they:

1. are associated or have been associated in the past, directly or indirectly with a firm or any of its affiliates which have been engaged by the Procuring Agency to provide consulting services for the preparation of the design, specifications and other documents to be used for the procurement of the Goods to be purchased under this Invitation for Bids.

2. have controlling shareholders in common; or

3. receive or have received any direct or indirect subsidy from any of them; or

4. have the same legal representative for purposes of this Bid; or

5. have a relationship with each other, directly or through common third parties, that puts them in a position to have access to information about or influence on the Bids of another Bidder, or influence the decisions of the Procuring Agency regarding this Bidding process; or

6. Submit more than one Bid in this Bidding process.

3.4 A Bidder may be ineligible if –

1. he is declared bankrupt or, in the case of company or firm, insolvent;

2. payments in favor of the Bidder is suspended in accordance with the judgment of a court of law other than a judgment declaring bankruptcy and resulting (in accordance with the national laws) in the total or partial loss of the right to administer and dispose of its property;

3. the Bidder is convicted, by a final judgment, of any offence involving professional conduct;

4. the Bidder is blacklisted locally or by international organizations and hence debarred due to involvement in corrupt and fraudulent practices, or submission of false or misleading information or performance failure or involved in disrupting procurement process or due to breach of bid Securing Declaration.

3.5 As and when required, bidders shall provide to the Procuring Agency evidence of their eligibility, proof of compliance with the necessary legal requirements to carry out the contract effectively.

3.6 Bidders shall submit Bids relating to the nature, conditions and modalities of sub-contracting wherever the sub-contracting of any elements of the contract amounting to more than ten (10) percent of the Bid price is envisaged.

4. Eligible Goods and Related Services

4.1 All goods and related services to be supplied under the contract shall have their origin in eligible source countries, and all expenditures made under the contract will be limited to such goods and services. For purpose of this Bid, ineligible countries are the countries declared ineligible by the Federal Government.

5. One Bid per Bidder

5.1 A bidder shall submit only one Bid, in the same bidding process, either individually as a Bidder or as a member in a joint venture or any similar arrangement.

5.2 **The Bidder shall not engage a subcontractor for any portion of the contract if the value of such subcontracting exceeds thirty percent (30%) of the total contract amount.**

6. Cost of Bidding

6.1 Any cost incurred by the bidder relating to the preparation and submission of its Bid shall be borne by the bidder, and the Procuring Agency shall in no case be responsible or liable for those costs, regardless of the conduct or outcome of the bidding process.

B. Bidding Documents

7. Contents of Bidding Document

7.1 The Goods required, Bidding procedures, and terms and conditions of the contract are prescribed in the Bidding Documents. In addition to the Invitation for Bids, the Bidding documents which should be read in conjunction with any addenda issued in accordance with **ITB 10.1** include:

Section I -Invitation to Bids

Section II Instructions to Bidders (ITB)

Section III Bid Data Sheet (BDS)

Section IV Evaluation Criteria, Specifications, Schedule of Requirements

Section V Bid Forms

Section VI General Conditions of Contract (GCC)

Section VII Special Conditions of Contract (SCC)

Section VIII Contract Forms

Section IX Integrity Pact

Section X Declaration of Beneficial Ownership Information.

7.2 The Bidder is expected to examine all instructions, forms, terms and specifications in the Bidding documents. Failure to furnish all the information required in the Bidding documents through EPADS v2.0 will be at the Bidder's risk and may result in the rejection of its Bids.

8. Clarification of Bidding documents

8.1 A prospective Bidder requiring any clarification of the Bidding documents may notify the Procuring Agency through EPADS v2.0**.**

8.2 The Procuring Agency will within two (02) working days after receiving the request for clarification, respond to any request for clarification through EPADS v2.0 provided that such request is received not later than three (03) days, prior to the deadline for the submission of Bids as prescribed in **ITB 22**

8.3 The Procuring Agency's response will be forwarded to all identified Prospective Bidders through EPADS v2.0, including a description of the inquiry,

but without identifying its source.

8.4 Should the Procuring Agency deem it necessary to amend the Bidding document as a result of a clarification, it shall do so following the procedure under **ITB 9.**

8.5 If indicated **in the BDS**, the Bidder's designated representative is invited at the Bidder's cost to attend a pre-Bid meeting at the place, date and time mentioned **in the BDS**. During this pre-Bid meeting, prospective Bidders may request clarification of the schedule of requirement, the Evaluation Criteria or any other aspects of the Bidding document.

8.6 Minutes of the pre-Bid meeting, if applicable, including the text of the questions asked by Bidders, including those during the meeting (without identifying the source) and the responses given, together with any responses prepared after the meeting will be uploaded on EPADS v2.0. Any modification to the Bidding documents that may become necessary as a result of the pre-Bid meeting shall be made by the Procuring Agency exclusively through the use of an Addendum pursuant to ITB 9. Non-attendance at the pre-Bid meeting will not be a cause for disqualification of a Bidder.

9. Amendment of Bidding documents

9.1 Before the deadline for submission of Bids, the Procuring Agency for any reason, whether at its own initiative or in response to a clarification requested by a prospective Bidder or Pre-Bid meeting may modify the Bidding documents by issuing addenda through EPADS v2.0.

9.2 The Procuring Agency shall promptly publish the addendum through EPADS v2.0.

Any addendum issued including the notice of any extension of the deadline shall also be communicated through EPADS v2.0 to all the bidders who have already submitted their bids. Such bidders shall have the right to withdraw their already submitted bid and re-submit the revised bid prior to the original or extended bid submission deadline.

9.3 To give prospective Bidders reasonable time in which to take an addendum/corrigendum into account in preparing their Bids, the Procuring Agency may, at its discretion, extend the deadline for the submission of Bids through EPADS v2.0:

Provided that the Procuring Agency shall extend the deadline for submission of Bids, if such an addendum is issued within last three (03) days of the Bids submission deadline.

C. Preparation of Bids

10. Language of Bid

10.1 The Bid prepared by the bidder, as well as all correspondence and documents relating to the Bids exchanged by the Bidder and the Procuring Agency shall be written in the English language unless otherwise specified in the BDS**.** Supporting documents and printed literature furnished by the Bidder may be in another language provided they are accompanied by an accurate translation of the relevant pages in the English language unless otherwise specified in the **BDS**, in which case, for purposes of interpretation of the Bidder, the translation shall govern.

11. Documents and samples Constituting the Bid

11.1 The Bid prepared by the Bidder shall constitute the documents required in the **BDS**.

Details of sample(s) where applicable and requested in the BDS.

Documentary evidence established in accordance with ITB 13 that the Bidder is eligible and/or qualified for the subject bidding process;

Documentary evidence established in accordance with **ITB 03** that the Bidder has been authorized by the manufacturer to deliver the goods into Pakistan, where required and where the supplier is not the manufacturer of those goods;

Documentary evidence established in accordance with ITB 12 that the goods and related services to be supplied by the Bidder are eligible goods and services, and conform to the Bidding Documents;

Bid security or Bid Securing Declaration furnished in accordance with **ITB ---.**

12. Documents Establishing Eligibility of the Goods and Conformity to Bidding documents

12.1 To establish the conformity of the bidder to the Bidding document, the Bidder shall furnish as part of its Bids the documentary evidence that Goods

provided conform to the technical specifications and standards.

13. Documents Establishing Eligibility and Qualification of the Bidder

13.1 Pursuant to **ITB 10,** the Bidder shall furnish, as part of its Bid, all those documents establishing the Bidder's eligibility to participate in the Bidding process and/or its qualification to perform the contract if its Bid is accepted.

14. Form of Bid

14.1 The Bidder shall fill the Form of Bid furnished in the Bidding document. The Bid Form must be completed without any alterations to its format and no substitute shall be accepted.

15. Bid Prices

15.1 The Bid Prices quoted by the Bidder in the Form of Bid and in the Price Schedules shall conform to the requirements specified below or exclusively mentioned hereafter in the Bidding documents.

15.2 **All items in the Schedule of Requirement must be listed and priced separately in the Price Schedule(s). If a Price Schedule shows items listed but not priced and neither explicitly denied, their prices shall be construed to be included in the prices of other items.**

15.3 In the event that any item(s) in the Price Schedule are not quoted, and such omission is determined by the Procuring Agency not to materially affect the responsiveness of the Bid, the Procuring Agency may, for the sole purpose of bid evaluation and comparison, assign a price to the unquoted item(s) in accordance with the following methodology:

(a) The assigned price shall be the average of the prices quoted for the same item(s) by all substantially responsive bidders; or

(b) In cases where no comparable quotations are available, the Procuring Agency shall apply the corresponding item price from its duly approved cost estimate for evaluation purposes.

The prices so assigned shall be utilized exclusively for bid evaluation and comparison, and shall not, under any circumstances, be incorporated into or form part of the Contract Price.

15.4 The Bid price to be quoted in the Form of Bid in accordance with **ITB 13.1** shall be the total price of the Bid.

15.5 The Bidder shall indicate on the appropriate Price Schedule, the unit prices (where applicable) and total Bid price of the Goods it proposes to provide under the contract.

15.6 Prices quoted by the Bidder shall be fixed during the Bidder's performance of the contract and not subject to variation on any account. A Bid submitted with an adjustable price will be treated as non-responsive and shall be rejected.

16. Bids Currencies

16.1 Prices shall be quoted in Pakistani Rupees unless otherwise specified in the BDS in accordance with Rule 42 (2) of the Public Procurement Rules, 2026.

17. Bids Validity Period

17.1 Such extensions may be more than one time but the total period of such extension shall not exceed the original bid validity period.

17.2 Bids shall remain valid for the period specified in the **BDS** after the Bid submission deadline prescribed by the Procuring Agency. A Bid valid for a shorter period shall be rejected by the Procuring Agency as non-responsive**.** The period of Bid validity will be determined from the complementary Bid securing instrument, i.e. the expiry period of Bid Security or Bids Securing Declaration as the case may be.

The procuring agency shall ordinarily be under an obligation to process and evaluate the bid and to issue letter of award within the stipulated bid validity period.

17.3 Under exceptional circumstances, prior to the expiration of the initial Bid validity period, the Procuring Agency may request the Bidders' consent to an extension of the period of validity of their Bids through EPADS v2.0,. The Bid Security provided under **ITB 17** shall also be suitably extended. A Bidder may refuse the request without forfeiting its Bid security or causing to be executed its Bid Securing Declaration. A Bidder agreeing to the request will not be required nor permitted to modify its Bid, but will be required to extend the validity of its Bid Security or Bid Securing Declaration for the period of the extension.

18. Bid Security or Bid Securing Declaration

18.1 The Bidder shall furnish as part of its Bid, a Bid Security in accordance with Rule 36 of the Public Procurement Rules, 2026.

18.2 The original Bid Security shall be enclosed within the sealed envelope and to be submitted physically before closing time for submission of bids. Whereas, scanned copy of bid security shall be uploaded electronically through EPADS v2.0 before closing hours for submission of bids.

18.3 The Bidder who failed to submit the original Bids security before the submission deadline shall be disqualified straightaway.

18.4 The Bid Security or Bid Securing Declaration is required to protect the Procuring Agency against the risk of Bidder’s conduct which would warrant the security’s forfeiture, pursuant to **ITB 18.7.**

18.5 The Bid Security shall be denominated in the local currency or in another freely convertible currency, and it shall be in the form specified in the BDS which shall be in any of the following:

a) a bank guarantee, a bank draft, an irrevocable letter of credit issued by a Scheduled bank in the form provided in the Bidding Documents or another form acceptable to the Procuring Agency;

b) a cashier’s or certified cheque; or

c) another security if indicated in the BDS.

The Bid Security shall be valid for twenty-eight (28) days beyond the end of the validity of the Bid. This shall also apply if the period for Bid Validity is extended. In either case, the form must include the complete name of the Bidder.

18.6 The Bid Security shall be payable promptly upon written demand by the Procuring Agency in case any of the conditions listed in **ITB 18.7** are invoked.

18.7 Unsuccessful Bidders' Bid Security will be discharged or returned as promptly as possible, however in no case later than thirty (30) days after the expiration of the period of Bid Validity prescribed by the procuring agency pursuant to **ITB 17.** The Procuring Agency shall make no claim to the amount of the Bid Security, and shall promptly return the Bid Security documents, after whichever of the following that occurs earliest:

a. the expiry of the Bid Security;

b. the entry into force of a procurement contract and the provision of a Performance Guarantee, for the performance of the contract if such a guarantee, is required by the Bid documents;

c. the rejection by the Procuring Agency of all Bids;

d. cancellation of procurement proceedings.

e. the withdrawal of the Bid prior to the deadline for the submission of Bids, unless the Bid document stipulates that no such withdrawal is permitted.

18.8 The successful Bidder's Bid Security will be discharged upon the Bidder signing the contract**,** or furnishing the Performance Guarantee.

18.9 The Bid Security may be forfeited or the Bid Securing Declaration executed:

a. if a Bidder:

b. withdraws its Bid during the period of Bid Validity as specified by the Procuring Agency, and referred by the Bidder on the Form of Bids except as provided for in **ITB 16.2**; or

c. does not accept the correction of errors**;** or

d. in the case of a successful Bidder, if the Bidder fails:

e. to sign the contract; or

f. to furnish Performance Guarantee**.**

19. Withdrawal, Substitution, and Modification of Bid

19.1 Before Bid submission deadline, any Bidder may withdraw, substitute, or modify its Bid after it has been submitted through EPADS v2.0.

20. Format and Signing of Bid

20.1 The Bidder shall prepare and submit Bids with due diligence after carefully reading all the terms and condition before bid submission deadline through EPADS v2.0.

D. Submission of Bids

21. Submission of Bids through EPADS v2.0 before bid submission deadline.

21.1 The Technical and Financial Bids, shall be submitted electronically through EPADS, before bid submission deadline. The bid submission option shall be automatically disabled once the deadline is over.

22. Deadline for Submission of Bids

22.1 Bids shall be received by the Procuring Agency through EPADS v2.0 before bid submission deadline.

22.2 The Procuring Agency may, under exceptional circumstances, extend the deadline for the submission of Bids, after recording reasons in writing and in an equal opportunity manner.

In such case, all rights and obligations of the Procuring Agency and the Bidders that were previously governed by the original deadline shall thereafter be subject to the revised deadline.

E. Opening and Evaluation of Bids

23. Opening of Bids

23.1 The respective Bid Evaluation Committee of the Procuring Agency shall open all Bids through the EPADS v2.0, on the date and time specified in the Bid Data Sheet (BDS).

23.2 The respective Bid Evaluation Committee **shall generate minutes through EPADS v2.0 containing brief details of bid opening process.** The record of the Bid opening shall include, as a minimum: the name of the Bidder, the Bid price if applicable, and the presence or absence of a Bid Security or Bid Securing Declaration.

23.3 The procuring agency shall live broadcast the opening of bids on national media or on their website or digital channels, if the volume of procurement exceeds five hundred million rupees in case of goods and services and one thousand million rupees in case of works.

23.4 In case the date of opening of bid has been declared as public holiday or the procuring agency fails to open bid due to any EPADS v2.0 related issues, the submission and opening of bids shall be shifted to the next working day at the same time.

23.5 In case of Single Stage One Envelope Procedure, the Bidders names, the Bid prices, the total amount of each Bid and, the presence or absence of Bid Security, Bid Securing Declaration and such other details as the Procuring Agency may consider appropriate, will be announced by the Bid respective Evaluation Committee.

23.6 No bid will be rejected at the time of bid openning except for bids whose original bid security has not been provided to the procuring agency before bid submission deadline.

24. Clarification of Bids

24.1 To assist in the examination, evaluation and comparison of Bids of the Bidders, the respective Bid Evaluation Committee may, ask any Bidder for a clarification of its Bid including breakdown of prices.

24.2 The request for clarification and the response shall be sought through EPADS v2.0 before **three days prior to the deadline for submission of bids.** No change in the prices or substance of the Bids shall be sought, offered, or permitted.

24.3 The alteration or modification in the bids which in any way affect the following parameters will be considered as a change in the substance of a Bid:

1. evaluation & qualification criteria;
2. required scope of work or specifications;
3. all securities requirements;
4. tax requirements;
5. terms and conditions of Bidding documents.
6. change in the ranking of the Bidder

24.4 From the time of bid(s) opening to the time of Contract award if any Bidder wishes to contact the Procuring Agency on any matter related to the Bids it should do so through **EPADS v2.0**.

25. Preliminary Examination of Bids

25.1 Prior to the detailed evaluation of Bids, the respective Bid Evaluation Committee will determine whether each Bid:

1. meets the eligibility criteria defined in **ITB 3**;

2. has been prepared as per the format and contents defined by the Procuring Agency in the Bidding documents;

3. is accompanied by the required securities; and

4. is substantially responsive to the requirements of the Bidding documents.

25.2 The respective Bid Evaluation Committee's determination of a Bid's responsiveness will be based on the contents of the Bid itself.

25.3 A substantially responsive Bid is one which conforms to all the terms, conditions, and specifications of the Bidding documents, without material deviation or reservation. A material deviation or reservation is one that: -

1. affects in any substantial way the scope, quality, or performance of the Goods;

2. limits in any substantial way, inconsistent with the Bidding documents, the Procuring Agency's rights or the Bidders obligations under the Contract; or

3. if rectified, would affect unfairly the competitive position of other Bidders presenting substantially responsive Bids.

25.4 If a Bid is not substantially responsive, it will be rejected by the respective Bid Evaluation Committee and may not subsequently be evaluated for complete technical responsiveness.

26. Examination of Terms and Conditions; Technical Evaluation

26.1 The respective Bid Evaluation Committee shall examine the Bids to confirm that all terms and conditions specified in the **GCC** and the **SCC** have been accepted by the Bidder without any material deviation or reservation.

26.2 The respective Bid Evaluation Committee shall evaluate the technical aspects of the Bids submitted, to confirm that all requirements specified in Schedule of Requirements and Technical Specifications of the Bidding documents have been met without material deviation or reservation.

26.3 If after the examination of the terms and conditions and the technical evaluation, the respective Bid Evaluation Committee determines that the Bid is not substantially responsive in accordance with **ITB,** it shall reject the Bid.

27. Correction of Errors

27.1 Bids determined to be substantially responsive will be checked for any arithmetic errors. Errors will be corrected as follows: -

1. if there is a discrepancy between unit price and the total price that is obtained by multiplying the unit price and quantity, the unit price shall prevail, and the total price shall be corrected, unless in the opinion of the respective Evaluation Committee there is an obvious misplacement of the decimal point in the unit price, in which the total price as quoted shall govern and the unit price shall be corrected;

2. if there is an error in a total corresponding to the addition or subtraction of sub-totals, the sub-totals shall prevail and the total shall be corrected; and

3. where there is a discrepancy between the amounts in figures and in words, the amount in words will govern.

4. Where there is discrepancy between grand total of price schedule and amount mentioned on the Form of Bid, the amount referred in Price Schedule shall be treated as correct subject to elimination of other errors.

27.2 The amount stated in the Bid will be adjusted by the respective Bid Evaluation Committee in accordance with the above procedure for the correction of errors and, with the concurrence of the Bidder, shall be considered as binding upon the Bidder. If the Bidder does not accept the corrected amount, its Bid will then be rejected, and the Bid Security may be forfeited or the Bids Securing Declaration may be executed.

28. Conversion to Single Currency

28.1 For the purposes of comparison of bids quoted in different currencies, the price shall be converted into a single currency in accordance with Rule 42(2) of Public Procurement Rules,2026.

29. Evaluation of Bids

29.1 The Bids, quotations, or proposals shall be evaluated by the respective evaluation committees as per evaluation criteria prescribed in the Bidding Documents in accordance with Rule 11, 12 and 13 of the Public Procurement Rules, 2026.

29.2 While evaluating the bids, the procuring agency shall consider the following:

i. Bids will be evaluated on lump sum bid basis or items wise or Lot wise (contracts), as specified in the BDS; and the Bid Price;

ii. correction of arithmetic errors in accordance with ITB 27;

30. Domestic Preference

30.1 The respective Bid Evaluation Committee shall evaluate and compare bids, allow for preference to domestic bidders, while competing with the international bidders in accordance with the policies of the Federal Government.

The percentage of preference, to be accorded shall be clearly mentioned in the bidding documents under the bid evaluation criteria.

31. Determination of Successful Bid

31.1 **Selection technique will be adopted for determining the Successful Bid in accordance with the criteria referred in the BDS or prescribed in the separate section titled as Evaluation Criteria.**

31.2 **Least Cost Based Selection (LCBS)**
After meeting the requirements of eligibility, qualification and substantial responsiveness, the bid in compliance with all the mandatory (technical) specifications/requirements and/or requisite quality threshold (if any), and having lowest evaluated cost (or financial proposal) shall be considered Successful Bid.

31.3 **Quality and Cost Based Selection (QCBS)**
In such combination, there shall be some specific weightage of both the technical features and financial aspects of the proposal. The financial marks shall be awarded on the basis of inverse proportion calculations. The successful bid shall be declared, on the basis of combined evaluation.

31.4 **Quality Based Selection (QBS)**
After meeting the requirements of eligibility, qualification and substantial responsiveness the bid in compliance with all the mandatory (technical) specifications/requirements and attaining highest marks in the Technical Evaluation considering all other qualitative and/or quantitative parameters (or point rated criteria) for technical proposal(s) such as working methodology, implementation plan, resource allocation, additional functionalities, risk

management approach, knowledge transfer techniques, post implementation methodology etc. shall be treated as highest ranked bid. Later on, the financial proposal of highest ranked bidder shall be opened, however, in case of failure to proceed further with such a bidder, the procuring agency may resort to second highest bidder and so on.

31.5 The Procuring Agency may adopt the Quality & Cost Based Selection Technique due to the following two reasons:

1. Where the Procuring Agency knows about the main features, usage and output of the products; however not clear about the complete features, technical specifications and functionalities of the goods to be procured and requires the bidders to submit their proposals defining those features, specifications and functionalities; or

2. Where the Procuring Agency, in addition to the mandatory requirements and mandatory technical specifications, requires parameters specified in Evaluation Criteria to be evaluated while determining the quality of the goods.

31.6 In such cases, the Procuring Agency may allocate certain weightage to these factors as a part of Evaluation Criteria, and may determine the ranking of the bidders on the basis of combined evaluation in accordance with provisions of Rule 2(1)(xxviii) of the Public Procurement Rules, 2026.

32. Abnormally Low Financial Bids

32.1 An abnormally low bid is a bid that, in light of the Procuring Agency's cost estimate, market conditions, or other received bids, appears to be unrealistically low and may not be sustainable for successfull contract execution.

32.2 **Where the Bid price is considered to be abnormally low, the Procuring Agency shall perform price analysis either during determination of Successful Bids or as a part of the post-qualification process.**

32.3 The Procuring Agency may reject an Abnormally low financial bid in accordance with Rule 43 of the Public Procurement Rules, 2026.

32.4 In order to identify the Abnormally Low Bids (ALB) following approaches can be considered to minimize the scope of subjectivity:

1. Comparing the Bid price with the cost estimate;

2. Comparing the Bid price with the Bid(s) offered by other Bidders submitting substantially responsive Bids; and

3. Comparing the Bids price with prices paid in similar contracts in the recent past either government- or development partner-funded.

32.5 The respective Bid Evaluation Committee will determine to its satisfaction whether the Bidder that is selected as having submitted the successful bid is qualified to perform the contract satisfactorily.

32.6 The determination will take into account the Bidder's financial, technical, and production capabilities. It will be based upon an examination of the documentary evidence of the Bidder's qualifications submitted by the Bidder, as well as such other information as the Procuring Agency deems necessary and appropriate. Factors not included in these Bidding documents shall not be used in the evaluation of the Bidders' qualifications.

32.7 Respective Bid Evaluation Committee may seek "Certificate for Independent Price Determination" from the Bidder and the results of reference checks may be used in determining an award of contract.

Explanation: The Certificate shall be furnished by the Bidder. The Bidder shall certify that the price is determined keeping in view of all the essential aspects such as raw material, its processing, value addition, optimization of resources due to economy of scale, transportation, insurance and margin of profit etc.

32.8 An affirmative determination will be a prerequisite for award of the contract to the Bidder. A negative determination will result in rejection of the Bidder's Bid, in which event the respective Bid Evaluation Committee will proceed to the next ranked Bidder to make a similar determination of that Bidder's capabilities to perform satisfactorily.

F. Award of Contract

33. Criteria of Award

33.1 The Procuring Agency will award the Contract to the Bidder whose Bids has been determined to be substantially responsive to the Bidding documents and who has been declared as Successful Bidder.

34. Negotiations

34.1 In accordance with Rule 52A of Public Procurement Rules, 2026, without changing the cost and scope of work or services, the procuring agency may

negotiate with the successful bidder (with a view to streamline the work or task execution, at the time of contract finalization) on methodology, work plan, staffing and special conditions of the contract.

There shall be no limitation on the successful bidder offering voluntary reduction in bid price without affecting the quality or scope of the procurement.

35. Procuring Agency's Right to reject all bids

35.1 The Procuring Agency reserves the right to reject all bids or proposals at any time prior to the issuance of the Letter of Award, without incurring any liability, in accordance with Rule 45 of the Public Procurement Rules, 2026.

36. Cancellation of Procurement

36.1 The procuring agency reserves the right to cancel the procurement proceedings in accordance with Rule 46 of the Public Procurement Rules, 2026.

37. Procuring Agency’s Right to Vary Quantities at the Time of Award

37.1 The Procuring Agency reserves the right at the time of contract award to increase or decrease the **quantity of** Goods originally specified in these Bidding documents provided this does not exceed **by** 15%, without any change in unit price or other terms and conditions of the Bids and Bidding documents.

38. Notification of Award

38.1 Prior to the award of contract, the procuring agency shall announce and publish the result of bid evaluation on EPADS v2.0 in accordance with Rule 48 of the Public Procurement Rules, 2026.

The Bidder whose Bids has been accepted will be notified of the award by the Procuring Agency prior to expiration of the Bids/Bid Validity period. The Letter of Award will state the sum that the Procuring Agency will pay the successful Bidder in consideration for the delivery of Goods as prescribed by the Contract (hereinafter and in the Contract called the "Contract Price).

38.2 The Letter of award will constitute the formation of the Contract, subject to the Bidder furnishing the Performance Guarantee and signing of the contract.

39. Signing of Contract

39.1 Promptly after issuance of Letter of award, Procuring Agency shall send the successful Bidder the draft Contract, incorporating all terms and conditions as agreed by the parties to the contract.

39.2 Immediately after the Redressal of grievance by the GRC (if any), and **after fulfillment of all conditions precedent** of the Contract Form, the successful Bidder and the Procuring Agency shall sign the Contract.

40. Corrupt & Fraudulent Practices

40.1 Procuring Agencies (including beneficiaries of Government funded projects and procurement) as well as Bidders/Contractors under Government financed contracts, observe the highest standard of ethics during the procurement and execution of such contracts, and will avoid engaging in any corrupt and fraudulent practices.

F. Grievance Redressal & Complaint Review Mechanism

41. Constitution of Grievance Redressal Committee

41.1 The Grievance Redressal Committee shall address the grievance, if any submitted by any party, including the bidder, in accordance with Rule 65 of the Public Procurement Rules, 2026 read with Redressal of Grievances Regulations, 2021.

In case if any party or the bidder is not satisfied with the decision of the GRC or if it fails to decide within ten days, the bidder or the party may file an appeal before the Appellate Committee of the Authority in accordance with Rule 65(7) of the Public Procurement Rules, 2026 to be read with Redressal of Grievances Regulations, 2021.

G. Mechanism of Blacklisting

42. Mechanism of Blacklisting

42.1 The Procuring Agency shall initiate blacklisting proceedings against any bidder, supplier, or contractor in accordance with the Rule 25 of the Public Procurement Rules, 2026.

42.2 The blacklisted/debarred bidder may file the review petition before the Authority in accordance with Rule 25 (6) of the Public Procurement Rules, 2026 to be read with Procedure of filing and disposal of Review Petitions Regulations, 2021.

43. Contract Management

43.1 For each procurement, the Procuring Agency shall designate a Contract Manager, who shall be duly responsible for the efficient management and administration of the contract in strict compliance with the provisions set forth under Rules 58, 59, and 60 of the Public Procurement Rules, 2026.

44. Inspection of goods and evaluation of services.

44.1 The Inspection Committee or the Firm shall have the right to conduct inspections of the goods in accordance with Rule 61 of the Public Procurement Rules, 2026.

45. Socio-economic development.

45.1 In accordance with Rule 63 of the Public Procurement Rules, 2026, preference may be granted to small and medium enterprises and marginalized groups in accordance with the policies notified by the Federal Government.

46. Environmental objectives

46.1 As per Rule 64 of the Public Procurement Rules, 2026, the procuring agency may seek to procure goods with a reduced environmental impact throughout their life cycle when compared to goods services with the same primary function that may otherwise be procured.

Bid Data Sheet

Bids Data Sheet (BDS)

The following specific data for the procurement of Goods to be procured shall complement, supplement, or amend the provisions in the Instructions to Bidders (ITB). Whenever there is a conflict, the provisions herein shall prevail over those in ITB.

BDS Clause Number
ITB Number
Amendments of, and Supplements to, Clauses in the Instruction to Bidders

A. Introduction

BDS Clause Number 1
ITB Number 1.1

Name of Procuring Agency: **SSGC (PROCUREMENT DEPARTMENT)**

The subject of procurement is: **SSGC/LP/EPADS2/NR/2189309-2 (HARDWARE MATERIAL FOR WORKSHOP)**

Period for Provision of Goods:

Extension Period (if applicable):

Expected commencement date: **Tuesday, November 30, 2027**

BDS Clause Number 2
ITB Number 2.1

Source of funds [Enter source of funds]

Financial year for the operations of the Procuring Agency: **2026-27**

Name and identification number of the Contract: **P167424**

Identification Number:

BDS Clause Number 3
ITB Clause Number 3.1

Eligible Bidder [Enter eligibility of bidder]

JV/Consortium or Association Allowed: **No**
Number of JV/Consortium Members: **Nil**
see section of eligibility criteria.

B. Bidding Documents

BDS Clause Number 4

ITB Clause Number 4.1

Eligible goods and related services [Enter requirements for eligible goods and related services, if any]

ITB Number 8.1

The Bidders may seek clarifications through **EPADS v2.0** : Clarification Date: Saturday, November 7, 2026

ITB Number 8.2

The Bidders may seek clarifications through **EPADS v2.0** : Clarification Date: Saturday, November 7, 2026

ITB Number 8.3

The Bidders may seek clarifications through **EPADS v2.0** : Clarification Date: Saturday, November 7, 2026

ITB Number 8.5

Pre-bid meeting will be/will not be held [Tick the appropriate] If yes write down the time, and date of the pre-Bid meeting:
[The meeting should take place not later than one weeks before the deadline for Bid submission.]

C. Preparation of Bids

BDS Clause Number 5
ITB Number 10.1

The Language of all correspondences and documents related to the Bids shall be in: **English**

List of documents required along with the bid: No

BDS Clause Number 6
ITB Number 11.1

Documents required / not required with bid submission [enter list of documents] Samples required / not required with the bid [Enter the names and number of samples]

Items/Lots and their related documents:

See section items and Lots

BDS Clause Number 7
ITB Number 12.1

Items / Lots Specifications:

see section of items specifications.

BDS Clause Number 8
ITB Number 15.6

The price shall be **Fixed**.

BDS Clause Number 9
ITB Number 16.1

Currency of the Bids shall be : **PKR**

BDS Clause Number 10
ITB Number 17.1

The Bids/Bid Validity period shall be: **120 Days**

BDS Clause Number 11
ITB Number 18.1

The amount of Bid Security shall be as defined in Bid Security Section for items and lots given in **BDS 6**

Instrument of Bid Security shall be in the Name of : **Sui Southern Gas Company Limited**

The Bid Security shall be in the form of: **Pay Order, Call at Deposit, Bank Guarantee**

ITB Number 18.2

The address for submission of original bid security is [Insert the address for bid security submission]

D. Submission of Bids

BDS Clause Number 12
ITB Number 20.1

Bid shall be submitted online on EPADS v2.0 whereas hard copy of the bid security should be submitted to the following;

ST-4/B, Block 14, Sir Shah Suleman Road, Gulshan-e-Iqbal, Karachi, Pakistan before bid submission deadline.

Bids that are not submitted on EPADS v2.0 shall be disqualified.

The deadline for Bids submission is: **Tuesday, November 10, 2026 10:00 AM**

Day *:* ***Tuesday***

Date: ***Tuesday, November 10, 2026***

Time *:* ***10:30 AM***

E. Opening and Evaluation of Bids

BDS Clause Number 13
ITB Number 23.1

The Bids opening shall take place on **EPADS v2.0**.

Day *:* ***Tuesday***

Date: ***Tuesday, November 10, 2026***

Time *:* ***10:30 AM***

ITB Number 29.2

The procuring agency shall consider the following:
lump sum bid basis; or
items wise; or
Lot wise (contracts),

ITB Number 30.1

BDS Clause Number 14
ITB Number 31.1

Domestic Preference [applicable / not applicable]

ITB Number 31.2

Selection technique adopted will be:
The Procuring Agency shall use any of the following evaluation techniques for determination of successful bid.

Least Cost Base Selection (LCBS)
Quality and Cost Based Selection (QCBS)
Quality Based Selection (QBS)
[Insert the Evaluation Technique]

Selection technique adopted will be: **Least Cost Based Selection (LCBS)**
see Evaluation Criteria

F. Review of Procurement Decisions

BDS Clause Number 15
ITB Number 41.1

Grievence against this procurement shall be submitted online on EPADS v2.0.

Arbitrator shall be appointed by mutual consent of the both parties.

ITB Number 42.2

The Address of PPRA Grievance Redressal Appellate Committee to submit a copy of grievance:

Grievance Redressal Appellate Committee,
Public Procurement Regulatory Authority
1st Floor, G-5/2, Islamabad, Pakistan
Tel: +92-51-9202254

Eligibility Criteria

All Active Taxpayers shall be eligible to participate in the procurement process, unless expressly excluded or otherwise restricted under the Eligibility Criteria specified by the Procuring Agency.

Required Registration
FBR (NTN)
FBR (GSTN)

Eligibility Criteria	Document
All SSGC/SBD tender documents (Manual BoQ (Where applicable), Price Schedule) must be uploaded duly sign & stamp otherwise bid will be liable for rejection.	Yes
Physical bid security must be submitted at Tender Room, Head Office before bid closing date & time otherwise bid will not be entertain.	No

Evaluation Criteria

Eligibile bidder(s) with substantially responsive bid(s) offering **Least Cost Based Selection (LCBS)** shall be consider for the award of contract(s).

Least Cost Based Selection (LCBS)

PUBLIC PROCUREMENT REGULATORY AUTHORITY (PPRA) EPADS

Items/Lots

Items Without Lots :

Item	UNSPSC	Delivery Schedule	Quantity	Bid Security
1-03018933-MOULDING OF AXLE HUB END CAP SIZE : OVERALL LENGTH OF CAP 105MM	Miscellaneous	**Address:** Khadeji Store **Schedule:** 45 to 60 Days **Quantity:** 30/Qty	30/Qty	5400 PKR
2-03018943-ROUND HEAD WHEEL STUD NUT WITH EXTERNAL THREAD SIZE : TOTAL STUD LENGTH (SL) 97MM, X TOTAL STUD DIA (SD) 22MM	Miscellaneous	**Address:** Khadeji Store **Schedule:** 45 to 60 Days **Quantity:** 300/Qty	300/Qty	13500 PKR
3-03018953-WHEEL HUB DOUBLE ENDED STUD BOLT WITH EXTERNAL THREADING ON BOTH ENDS, SIZE : TOTAL STUD LENGTH: 129MM X 22MM DIA	Miscellaneous	**Address:** Khadeji Store **Schedule:** 45 to 60 Days **Quantity:** 300/Qty	300/Qty	13500 PKR
4-03018963-FLANGE NUT OF SIZE M22 /M22+X1.5 PITCH	Miscellaneous	**Address:** Khadeji Store **Schedule:** 45 to 60 Days **Quantity:** 300/Qty	300/Qty	7600 PKR

Related Services of Goods:

No

Items/Lot Specification

Items Without Lots :

Item: 1-03018933-MOULDING OF AXLE HUB END CAP SIZE : OVERALL LENGTH OF CAP 105MM

UNSPSC: Miscellaneous

Specifications / Requirementsss:

1-03018933-MOULDING OF AXLE HUB END CAP SIZE : OVERALL LENGTH OF CAP 105MM

Item: 2-03018943-ROUND HEAD WHEEL STUD NUT WITH EXTERNAL THREAD SIZE : TOTAL STUD LENGTH (SL) 97MM, X TOTAL STUD DIA (SD) 22MM

UNSPSC: Miscellaneous

Specifications / Requirementsss:

2-03018943-ROUND HEAD WHEEL STUD NUT WITH EXTERNAL THREAD SIZE : TOTAL STUD LENGTH (SL) 97MM, X TOTAL STUD DIA (SD) 22MM

Item: 3-03018953-WHEEL HUB DOUBLE ENDED STUD BOLT WITH EXTERNAL THREADING ON BOTH ENDS, SIZE : TOTAL STUD LENGTH: 129MM X 22MM DIA

UNSPSC: Miscellaneous

Specifications / Requirementsss:

3-03018953-WHEEL HUB DOUBLE ENDED STUD BOLT WITH EXTERNAL THREADING ON BOTH ENDS, SIZE : TOTAL STUD LENGTH: 129MM X 22MM DIA

Item: 4-03018963-FLANGE NUT OF SIZE M22 /M22+X1.5 PITCH

UNSPSC: Miscellaneous

Specifications / Requirementsss:

4-03018963-FLANGE NUT OF SIZE M22 /M22+X1.5 PITCH

PUBLIC PROCUREMENT REGULATORY AUTHORITY (PPRA) EPADS

Price Schedule

For Individual Items

#	Item Title	Quantity	Unit Price (PKR)	Total Price (PKR)	Delivery Location	Delivery Period / Year	Country of Origin
1							
2							

For Lots

#	Lot Title	Total Lot Price (PKR)	Country of Origin
1	[Lot 1 Title]		

PUBLIC PROCUREMENT REGULATORY AUTHORITY
(PPRA)
EPADS

General Conditions of Contract

A. General

1. Definitions

1.1 Unless the context otherwise requires, the following terms whenever used in this Contract shall have the same meaning and shall be interpreted as indicated

a. “Applicable Law” means the laws and any other instruments having the force of law in the Government’s Country, or in such other country as may be specified in the Special Conditions of the Contract (SC), as they may be issued and in force from time to time;

b. The “Arbitrator” is the person appointed with mutual consent of both the parties, to resolve contractual disputes as provided for in the General Conditions of the Contract GCC Clause 35 hereunder.

c. “Authority” means Public Procurement Regulatory Authority.

d. The “Commencement Date” is the date when the Supplier shall commence execution of the contract as specified in the SCC.

e. “Completion date” means the date of completion of the Contract by the Bidder as certified by the Procuring Agency.

f. “Procuring Agency” means:-

a. any Ministry, Division, Department or any Office of the Government;

b. any authority, corporation, body or organization established by or under a Law or which is owned or controlled by the Government;.

g. “The Contract” means an agreement enforceable by law;

h. “The Contract Price” means the price payable to the Bidder under the Contract for the full and proper performance of its contractual obligations;

i. “Ancillary Services” means those services ancillary to the provision of Goods, such as transportation and insurance, and any other incidental services, such as installation, commissioning, provision of technical assistance, training, and other such obligations of the Bidder covered under the Contract;

j. “GCC” means the General Conditions of Contract contained in this section;

k. “SCC” means the Special Conditions of Contract by which the GCC may be amended or supplemented;

l. **“**Day” means calendar day unless indicated otherwise.

m. “Defective Goods” are those goods which are below standards, requirements or specifications stated by the Contract.

n. “Delivery” means the transfer of the goods from the supplier equipment, machinery, and /or other materials which the Supplier is required to supply to the Procuring Agency under Contract.

o. “Effective Date” means the date on which this Contract comes into force and effect.

p. “Force Majeure” means an unforeseeable event which is beyond reasonable control of either Party and which makes a Party’s performance of its obligations under the Contract impossible or so impractical as to be considered impossible under the circumstances.

For the purposes of this Contract, “Force Majeure” means an event which is beyond the reasonable control of a Party, is not foreseeable, is unavoidable, and its origin is not due to negligence or lack of care on the part of a Party, and which makes a Party’s performance of its obligations hereunder impossible or so impractical as reasonably to be considered impossible in the circumstances. and includes, but is not limited to, war, riots, civil disorder, earthquake, fire, explosion, storm, flood, epidemics, or other adverse weather conditions, strikes, lockouts or other industrial action (except where such strikes, lockouts or other industrial action are within the power of the Party invoking Force Majeure to prevent), confiscation or any other action by Government agencies.

q. The Bidder” means the individual or corporate body whose Bids to provide the Goods has been accepted by the Procuring Agency;

r. “The Project Site,” where applicable, means the place or places named in Bids Data Sheet and technical Specifications;

s. “Government” means the Government of Pakistan;

t. “Subcontractor” means any entity to which the Bidder subcontracts any part of the Goods.

u. The “Services” means the work to be performed by the Bidder pursuant to this Contract and as prescribed in the Specifications and Schedule of Activities included in the Bidder’s Bids;

v. “Party” means the Procuring Agency or the Bidder, as the case may be, and “Parties” means both of them;

w. “Foreign Currency” means any currency other than the currency of the country of the Procuring Agency;

x. “Completion Date” means the date of completion of the contract by the Bidder as certified by the Procuring Agency;

y. “In Writing” means communicated in written form with proof of receipt;

z. “Local Currency” means the currency of Pakistan;

a. “Origin” means the place where the Goods were mined, grown, or produced or from which the Services are supplied. Goods are produced when, through manufacturing, processing, or substantial and major assembly of components, a commercially recognized new produce results that is substantially different in basic characteristics or in purpose or utility from its components.

b. “Specification” means the Specification of the Goods and performance of incidental services in accordance with the relevant standards included in the Contract and any modification or addition made or approved by the Procuring Agency.

c. “Procuring Agency” means: -
any Ministry, Division, Department or any Office of the Federal Government;
any authority, corporation, body or organization established by or under a Federal Law or which is owned or controlled by the Federal Government;

2. Application and Interpretation

2.1 These General Conditions shall apply to the extent that they are not superseded by provisions of other parts of the Contract.

2.2 In interpreting these Conditions of Contract headings and marginal notes are used for convenience only and shall not affect their interpretations unless specifically stated; references to singular include the plural and vice versa; and masculine include the feminine. Words have their ordinary meaning under the language of the Contract unless specifically defined.

3. Applicable Law

3.1 The contract shall be governed and interpreted in accordance with the laws of Pakistan, unless otherwise specified in SCC.

4. Governing Language

4.1 The Contract as well as all correspondence and documents relating to the Contract exchanged between the Bidder and the Procuring Agency, shall be written in the **English language** unless otherwise stated in the **SCC**. Supporting documents and printed literature that are part of the Contract may be in another language provided these are accompanied by an accurate translation of the relevant passages in English, in which case, for purposes of interpretation of the Contract, this translation shall govern.

5. Notices

5.1 Any notice, request, or consent made pursuant to this Contract shall be in writing and shall be deemed to have been made when delivered in person to an authorized representative of the Party to whom the communication is addressed, or when sent by registered mail, telex, telegram, or facsimile to such Party at the address specified in the **SCC**.

6. Standard

6.1 The Goods supplied under this Contract shall conform to the standards mentioned in the Technical Specifications, and, when no applicable standard is mentioned, the American Standards (such as ACI, IEEE, ASME, etc.) or the Pakistani standards such as PSQCA Such standards shall be the latest issued by the concerned institution.

7. Delivery/Location

7.1 The Goods shall be delivered to such locations as the Procuring Agency may approve and as specified in SCC.

8. Authorized Representatives / Authority of Member in charge

8.1 Any action required or permitted to be taken, and any document required or permitted to be executed, under this Contract by the Procuring Agency or the Bidder may be taken or executed by the officials specified in the **SCC**.

B. Commencement, Completion, Modification, and Termination of Contract

8. Effectiveness of Contract

8.1 This Contract shall come into effect on the date the Contract is signed by both parties and such other later date as may be stated in the SCC.

9. Commencement of the Contract

9.1 The Bidder shall confirm availability of Key Experts and begin carrying out the Services not later than the number of days after the Effective Date specified in the SCC.

10. Program

10.1 Before commencement of the Contract, the Bidder shall submit to the Procuring Agency for approval a Program showing the general methods, arrangements, order and timing for all activities. The Services shall be carried out in accordance with the approved Program as updated.

11. Starting Date/Expiration Date

11.1 The Bidder shall start carrying out the Services Five (05) days after the date the Contract becomes effective, or at such other date as may be specified in the **SCC.**

11.2 Unless terminated earlier pursuant to Clause **GCC 16** hereof, this Contract shall expire at the end of such time period after the Effective Date as specified in the SCC.

12. Entire Agreement

12.1 This Contract contains all covenants, stipulations and provisions agreed by the Parties. No agent or representative of either Party has authority to make, and the Parties shall not be bound by or be liable for, any statement, representation, promise or agreement not set forth herein.

13. Modification

13.1 Any modification or variation of the terms and conditions of this Contract, including any modification or variation of the scope, may only be made by written agreement between the Parties. However, each Party shall give due consideration to any Bids for modification or variation made by the other Party.

13.2 In cases of any modifications or variations, the prior written consent of the Procuring Agency is required.

14. Force Majeure

14.1 Definition

For the purposes of this Contract, "Force Majeure" means an event which is beyond the reasonable control of a Party and which makes a Party's performance of its obligations under the Contract impossible or so impractical as to be considered impossible under the circumstances.

14.2 No Breach of Contract

The failure of a Party to fulfill any of its obligations under the contract shall not be considered to be a breach of, or default under, this Contract in so far as such inability arises from an event of Force Majeure, provided that the Party affected by such an event (a) has taken all reasonable precautions, due care and reasonable alternative measures in order to carry out the terms and conditions of this Contract, and (b) has informed the other Party as soon as possible about the occurrence of such an event.

14.3 Extension of Time

Any period within which a Party shall, pursuant to this Contract, complete any action or task, shall be extended for a period equal to the time during which such Party was unable to perform such action as a result of Force Majeure. However, such period shall not exceed sixty (60) days.

14.4 Payments

During the period of their inability to perform the Services as a result of an event of Force Majeure, the Bidder shall be entitled to continue to be paid under the terms of this Contract, as well as to be reimbursed for additional costs reasonably and necessarily incurred by them during such period for the purposes of the Services and in reactivating the Service after the end of such period.

15. Termination

15.1 By the Procuring Agency

The Procuring Agency may terminate this Contract in case of the occurrence of any of the events specified in paragraphs (a) through (e) of this Clause. In such an occurrence the Procuring Agency shall give at least thirty (30) calendar days' written notice of termination to the Bidder in case of the events referred to in (a) through (d); at least sixty (60) calendar days' written notice in case of the event referred to in (e);

a. If the Bidder fails to remedy a failure in the performance of its obligations hereunder, as specified in a notice of suspension;

b. If the Bidder becomes (or, if the Bidder consists of more than one entity, if any of its members becomes) insolvent or bankrupt or enter into any agreements with their creditors for relief of debt or take advantage of any law for the benefit of debtors or go into liquidation or receivership whether compulsory or voluntary;

c. If the Bidder fails to comply with any final decision reached as a result of arbitration proceedings;

d. If, as the result of Force Majeure, the Bidder is unable to perform a material portion of the Services for a period of not less than sixty (60) calendar days;

e. If the Procuring Agency, in its sole discretion and for any reason whatsoever, decides to terminate this Contract;

15.2 By the Bidder

The Bidder may terminate this Contract, by not less than thirty (30) calendar days' written notice to the Procuring Agency, in case of the occurrence of any of the events specified in paragraphs (a) through (d) of this Clause.

a. If the Procuring Agency fails to pay any money due to the Bidder pursuant to this Contract and not subject to dispute within forty-five (45) calendar days after receiving written notice from the Bidder that such payment is overdue.

b. If, as the result of Force Majeure, the Bidder is unable to perform a material portion of the Services for a period of not less than sixty (60) calendar days.

c. If the Procuring Agency fails to comply with any final decision reached as a result of arbitration.

d. If the Procuring Agency is in material breach of its obligations pursuant to this Contract and has not remedied the same within forty-five (45) days (or such longer period as the Bidder may have subsequently approved in writing) following the receipt by the Procuring Agency of the Bidder's notice specifying such breach.

C. Obligations of the Bidder

16. General

16.1 Standard of Performance

1. The Bidder shall deliver the product and carry out the Services with all due diligence, efficiency and economy, in accordance with generally accepted professional standards and practices, and shall observe sound management practices, and employ appropriate technology and safe and effective equipment, machinery, materials and methods. The Bidder shall always act, in respect of any matter relating to this Contract or to the Services, as a faithful adviser to the Procuring Agency, and shall at all times support and safeguard the Procuring Agency's legitimate interests in any dealings with the third parties.

16.2 Law Applicable to Goods

The Bidder shall deliver the goods in accordance with the Contract and in accordance with the Law of Pakistan and shall take all practicable steps to ensure that any of its Experts and Sub-Bidders, comply with the Applicable Law.

17. Conflict of Interests

17.1 Bidder Not to Benefit from Commissions and Discounts.

The remuneration of the Bidder shall constitute the Bidder's sole remuneration in connection with this Contract or the Services, and the Bidder shall not accept for their own benefit any trade commission, discount, or similar payment in connection with activities pursuant to this Contract or to the Services or in the discharge of their obligations under the Contract, and the Bidder shall use their best efforts to ensure that the Personnel, any Subcontractors, and agents of either of them similarly shall not receive any such additional remuneration.

17.2 Bidder and Affiliates Not to be Otherwise Interested in Project

The Bidder agree that, during the term of this Contract and after its termination, the Bidder and its affiliates, as well as any Subcontractor and any of its affiliates, shall be disqualified from providing Goods for any project resulting from or closely related to the Services.

17.3 Prohibition of Conflicting Activities

Neither the Bidder nor its Subcontractors nor the Personnel shall engage, either directly or indirectly, in any of the following activities:

a. during the term of this Contract, any business or professional activities in the Government's country which would conflict with the activities assigned to them under this Contract;

b. during the term of this Contract, neither the Bidder nor their Subcontractors shall hire public employees in active duty or on any type of leave, to perform any activity under this Contract;

18. Confidentiality

18.1 Except with the prior written consent of the Procuring Agency, the Bidder and the Experts shall not at any time communicate to any person or entity any confidential information acquired in the course of the contract.

19. Insurance to be Taken Out by the Bidder

19.1 The Bidder(a) shall take out and maintain, and shall cause any Subcontractors to take out and maintain, at its (or the Subcontractors', as the case may be) own cost but on terms and conditions approved by the Procuring Agency, insurance against the risks, loss or damage, and for the coverage, as shall be specified in the SCC; and (b) at the Procuring Agency's request, shall provide evidence to the Procuring Agency showing

that such insurance has been taken out and maintained and that the current premiums have been paid.

20. Bidder's Actions Requiring Procuring Agency's Prior Approval

20.1 The Bidder shall obtain the Procuring Agency's prior approval in writing before taking any of the following actions:

(a) appointing such members of the Personnel not provided by the Bidder;

(b) changing the Program of activities; and

(c) any other action that may be specified in the SCC.

21. Reporting Obligations

21.1 The Bidder shall submit to the Procuring Agency the reports and documents in the numbers, and within the periods as prescribed by the Procuring Agency.

22. Liquidated Damages

22.1 If the Supplier fails to deliver any or all of the Goods or to perform the Services within the period(s) specified in the Contract, the Procuring Agency shall, without prejudice to its other remedies under the Contract, deduct from the Contract Price, as liquidated damages, a sum equivalent to the percentage specified in **SCC** of the delivered price of the delayed Goods or unperformed Services for each week or part thereof of delay until actual delivery or performance, up to a maximum deduction of the performance security (or guarantee) specified in **SCC**. Once the said maximum is reached, the Procuring Agency may consider termination of the Contract pursuant to **GCC Clause 16.**

22.2 Correction for Over-payment

If the Intended Completion Date is extended after liquidated damages have been paid, the Procuring Agency shall correct any overpayment of liquidated damages by the Bidder by adjusting the next payment certificate. The Bidder shall be paid interest on the overpayment, calculated from the date of payment to the date of repayment, at the rates specified in SCC.

22.3 Lack of performance penalty

If the Bidder has not corrected a Defect within the time specified in the Procuring Agency's notice, a penalty for Lack of performance will be paid by the Bidder. The amount to be paid will be calculated as a percentage of the cost of having the Defect corrected, assessed as specified in the SCC.

23. Performance Guarantee

23.1 The Performance Security (or Guarantee) shall be provided to the Procuring Agency no later than the date specified in the Letter of Acceptance and shall be issued in an amount and form acceptable to the Procuring Agency as specified in SCC, and denominated in the types and proportions of the currencies in which the Contract Price is payable as specified in the SCC.

23.2 Within Seven (07) days from the issuance of acceptance letter from the Procuring Agency, the successful Bidder shall furnish the Performance Guarantee in shape of ------- at the discretion of the PA in the amount **specified in SCC.** In case the amount of Bids security is equal or greater than

23.3 The proceeds of the Performance Guarantee shall be payable to the Procuring agency as compensation for any loss resulting from the Supplier's failure to complete its obligations under the Contract.

23.4 The Performance Guarantee shall be denominated in the currency of the Contract, or in a freely convertible currency acceptable to the Procuring agency and shall be in the acceptable form as specified in SCC.

23.5 The Performance Guarantee will be discharged by the Procuring agency and returned to the Supplier not later than thirty (30) days following the date of completion of the Supplier's performance obligations under the Contract, including any warranty obligations, unless otherwise **specified in SCC.**

23.6 The bid security of the successful bidder shall not be substituted with the Performance Guarantee.

24. Fraud and Corruption

24.1 The Procuring Agency requires the Supplier to disclose any commissions or fees that may have been paid or are to be paid to agents or any other party with respect to the Bidding process or execution of the Contract. The information disclosed must include at least the name and address of the agent or other party, the amount and currency, and the purpose of the commission, gratuity or fee.

25. Sustainable Procurement

25.1 The Bidder shall conform to the sustainable procurement contractual provisions, if and as specified in the SCC.

D. Bidder's Personnel

26. Description of Personnel

26.1 The titles, agreed job descriptions, minimum qualifications, and estimated periods of engagement in the carrying out of the Services of the Bidder's Key Personnel. The Key Personnel listed by title as well as by name are hereby approved by the Procuring Agency.

27. Removal and/or Replacement of Personnel

27.1 Except as the Procuring Agency may otherwise agree, no changes shall be made in the Key Personnel. If, for any reason beyond the reasonable control of the Bidder, it becomes necessary to replace any of the Key Personnel, the Bidder shall provide as a replacement a person of equivalent or better qualifications.

27.2 If the Procuring Agency finds that any of the Personnel have (i) committed serious misconduct or have been charged with having committed a criminal action, or (ii) have reasonable cause to be dissatisfied with the performance of any of the Personnel, then the Bidder shall, at the Procuring Agency's written request specifying the grounds thereof, provide as a replacement a person with qualifications and experience acceptable to the Procuring Agency.

27.3 The Bidder shall have no claim for additional costs arising out of or incidental to any removal and/or replacement of Personnel.

E. Obligations of the Procuring Agency

28. Assistance and Exemptions

28.1 The Procuring Agency shall use its best efforts to ensure that the Government shall provide the Bidder such assistance and exemptions as specified in the SCC.

29. Change in the Applicable Law

29.1 If, after the date of this Contract, there is any change in the Applicable Law with respect to taxes and duties which increases or decreases the cost of the related Services rendered by the Bidder, then the remuneration and reimbursable expenses otherwise payable to the Bidder under this Contract shall be increased or decreased accordingly by agreement between the Parties, and corresponding adjustments shall be made to the amounts referred in the SCC.

30. Services and Facilities

30.1 The Procuring Agency shall make available to the Bidder and the Experts, for the purposes of the Services and free of any charge, the services, facilities and property described , at the times and in the manner specified in the SCC or terms of reference.

30.2 In case that such services, facilities and property shall not be made available to the Bidder, the Parties shall agree on (i) any time extension that it may be appropriate to grant to the Bidder for the performance of the Services, (ii) the manner in which the Bidder shall procure any such services, facilities and property from other sources, and (iii) the additional payments, if any, to be made to the Bidder as a result thereof.

F. Payments to the Bidder

31. Contract Price

31.1 The price payable shall be in Pakistani Rupees unless otherwise specified in the SCC. Prices charged by the Supplier for Goods delivered under the Contract shall not vary from the prices quoted by the Supplier in its Bid.

32. Terms and Conditions of Payment

32.1 Payments will be made to the Bidder according to the payment schedule stated in the SCC and as per actual invoice submitted by the Bidder.

32.2 Unless otherwise stated in the SCC, the advance payment shall be made against the provision by the Bidder of a bank guarantee for the same amount, and shall be valid for the period stated in the SCC. Any other payment shall be made after the conditions listed in the SCC for such payment have been met, and the Bidder have submitted an invoice to the Procuring Agency specifying the amount due.

33. Currency of Payment

33.1 Any payment under this Contract shall be made in the currency(ies) specified in the SCC.

G. Quality Control

34. Identifying Defects

34.1 The principle and modalities of Inspection of the Goods by the Procuring Agency shall be as indicated in the SCC. The Procuring Agency shall check the Bidder’s performance and notify him of any Defects that are found. Such checking shall not affect the Bidder’s responsibilities. The Procuring Agency may instruct the Bidder to search for a Defect and to uncover and test any service that the Procuring Agency considers may have a Defect. Defect Liability Period is as defined in the SCC.

35. Correction of Defects, and

Lack of Performance Penalty

35.1 The Procuring Agency shall give notice to the Bidder of any Defects before the end of the Contract. The Defects liability period shall be extended for as long as Defects remain to be corrected.

35.2 Every time notice a Defect is given, the Bidder shall correct the notified Defect within the length of time specified by the Procuring Agency's notice.

35.3 If the Bidder has not corrected a Defect within the time specified in the Procuring Agency's notice, the Procuring Agency will assess the cost of having the Defect corrected, the Bidder will pay this amount, and a Penalty for Lack of Performance.

36. Taxes and Duties

36.1 A Supplier shall be entirely responsible for all taxes, duties, fees, etc., incurred until delivery of the contracted Goods to the Procuring Agency.

H. Settlement of Disputes

37. Alternate Dispute Resolution

37.1 Upon the commencement of the Procurement Contract, any disputes arising between the contracting parties shall be resolved in accordance with Rule 66 of the Public Procurement Rules, 2026.

37.2 The procuring agency may refer the matter to the Chief Justice Islamabad High Court or Managing Director PPRA or the Secretary Ministry of Law & Justice for appointment of Arbitrator.

37.3 The fee for the Arbitrator shall be specified in Pak Rupees as determined by the appointing authority which shall be borne and shared equally by the contracting parties.

38. Change Orders

The Procuring Agency may at any time, by a written order given to the Supplier, make changes within the general scope of the Contract in any one or more of the following:

a)Drawings, designs, or specifications, where Goods to be furnished under the Contract are to be specifically manufactured for the Procuring Agency;
b)The method of shipment or packing;
c)The place of delivery; and/or
d)The Services to be provided by the Supplier.

39. Contract Amendenments

39.1 Subject to GCC Clause 32, no variation in or modification of the terms of the Contract shall be made except by written amendment signed by the parties.

40. Sub-Contracts

40.1 The Supplier shall consult the Procuring Agency in the event of subcontracting under this contract if not already specified in the Bid. Subcontracting shall not alter the Supplier's obligations.

Special Conditions of Contract

SECTION VIII. SPECIAL CONDITIONS OF CONTRACT

The following Special Conditions of Contract shall supplement the General Conditions of Contract. Whenever there is a conflict, the provisions herein shall prevail over those in the Conditions of Contract. The corresponding clause number of the GCC is indicated in parentheses.

Number of GC Clause

Amendments of, and Supplements to, Clauses in the General Conditions of Contract

Number of GC Clause 1

Definitions

The Procuring Agency is: **SSGC (PROCUREMENT DEPARTMENT), DCM ST-4/B, Block 14, Sir Shah Suleman Road, Gulshan-e-Iqbal, Karachi, Pakistan**

The Supplier is:

The title of the subject procurement is: **SSGC/LP/EPADS2/NR/2189309-2 (HARDWARE MATERIAL FOR WORKSHOP)**

Number of GC Clause 3

Applicable/Governing Law:

The Contract shall be interpreted in accordance with the laws of Islamic Republic of Pakistan

Number of GC Clause 4

Language:

The language of the Contract, all correspondence and communications to be given, and all other documentation to be prepared and supplied under the Contract shall be in **English.**

Number of GC Clause 5

Notices:

The addresses for the notices are:

The Authority:

SSGC (PROCUREMENT DEPARTMENT), DCM
ST-4/B, Block 14, Sir Shah Suleman Road, Gulshan-e-Iqbal, Karachi, Pakistan
+92-322-821-4899
MMTE@SSGC.COM.PK

Contractor/ Bidder:

[Name, address and telephone number].

The Contractor/ Bidder’s Representative(s)

[Name, address, telephone number and e-mail address]

Number of GC Clause 7.1

The Authorized Representatives are:

For the Procuring Agency:

SSGC (PROCUREMENT DEPARTMENT), DCM
ST-4/B, Block 14, Sir Shah Suleman Road, Gulshan-e-Iqbal, Karachi, Pakistan
+92-322-821-4899
MMTE@SSGC.COM.PK

For the Bidder:

Name: ……

Designation: ……..

Address: ……..

Number of GC Clause 8

Effectiveness of the contract

Number of GC Clause 9

Commencement of Contract:

Number of GC Clause 11.2

Expiration of Contract:

Number of GC Clause 15

Termination

In the event of termination of the contract due to any reason as already defined in the General Conditions of Contract, the Bidder shall be responsible for providing to the Authority the Goods till the time of alternate arrangements.

Number of GC Clause 17

Conflict of Interest:

The Procuring Agency reserves the right to determine on a case-by-case basis whether the Bidder should be disqualified from providing goods or services due to a conflict of a nature described in Clause GCC 17**.**

Number of GC Clause 22

Liquidated Damages

If the Bidder fails to provide services as required under the contract or in case of any data loss/data breach or any incident compromising the data security or other such failures related to any services, the Bidder shall pay to the Procuring Agency as Liquidated Damages at a rate of **0.01%** to **10.00%** of the Contract value, in accordance with the extent of performance failure & the cost of investigating such incidents as judged by the

Authority.

Number of GC Clause 23

Performance Guarantee:

Instrument of Performance Guarantee shall be in the Name of : **Sui Southern Gas Company Limited**

The amount of performance guarantee shall be **10.00%** of the contract price in acceptable form of **Pay Order, Call at Deposit, Bank Guarantee**

Number of GC Clause 32

Payment terms:

Payment will be made to the Bidder against the procured Goods and services according to the actual invoice or running bills submitted by the Bidder against the services provided within the time given in the conditions of the contract.

Number of GC Clause 33

Currency of Payment:

All the payment to be released to the contractor/Bidder shall be in Pakistani Rupees.

Number of GC Clause 34

Identifying Defects:

The Authority reserves the right at any time to inspect the premises of the provider to inspect the goods and monitor the goods being provided.

Number of GC Clause 37

Following is the guidance for Dispute Resolution

(a) For Contracts to be entered with foreign Contractor/ Service Provider:

All disputes arising in connection with the present Contract shall be finally settled under the Rules of Conciliation and Arbitration of the International Chamber of Commerce by one or more arbitrators appointed in accordance with said Rules.

(b) For Contracts to be entered with nationals of Pakistan:

i. If any dispute of any kind whatsoever shall arise between the Authority and the Bidder in connection with or arising out of the Contract, including without prejudice to the generality of foregoing, any question regarding its existence, validity, termination and the execution of the Contract – whether during developing phase or after their completion and whether before or after the termination, abandonment or breach of the Contract – the parties shall seek to resolve any such dispute or difference by mutual diligent negotiations in good faith within 14 (fourteen) days following a notice sent by one Party to the other Party in this regard.

ii. At future of negotiation the dispute shall be resolved through mediation and mediator shall be appointed with the mutual consent of the both parties.

iii. At the event of failure of mediation to resolve the dispute relating to this contract such dispute shall finally be resolved through binding Arbitration in accordance with GCC clause 38.

iv. The cost of the mediation and arbitration shall be shared by the parties in equal proportion however the both parties shall bear their own costs and lawyer's fees regarding their own participation in the mediation and arbitration. However, the Arbitrator may make an award of costs upon the conclusion of the arbitration making any party to the dispute liable to pay the costs of another party to the dispute.
v. Arbitration proceedings as mentioned in the above clause regarding resolution of disputes may be commenced prior to, during or after completion of the contract.

Notwithstanding any reference to the arbitration herein, the parties shall continue to perform their respective obligations under the Contract unless they otherwise agree that the Authority shall pay the Bidder any monies due to the Bidder.

Rules of procedure for arbitration proceedings:

Any dispute between the Authority and a Bidder who is a national of the Islamic Republic of Pakistan arising in connection with the present Contract shall be referred to adjudication or arbitration in accordance with the laws of the Islamic Republic of Pakistan including Arbitration Act 1940, however above provision shall prevail in referring the case to the Arbitrator.

Place of Arbitration and Award:

The arbitration shall be conducted in English language and place of arbitration shall be at Islamabad. The award of the arbitrator shall be final and shall be binding on the parties.

Bid Securing Declaration

Form 9: Bid Securing Declaration

Date: *[insert date (as day, month and year)]*

Bid No.:***P167424***

Alternative No.: **[insert identification No if this is a Bid for an alternative]**

To: **SSGC (PROCUREMENT DEPARTMENT), DCM ST-4/B, Block 14, Sir Shah Suleman Road, Gulshan-e-Iqbal, Karachi, Pakistan**

We, the undersigned, declare that:

We understand that, according to your conditions, Bids must be supported by a Bid Securing Declaration.

We accept that we will be blacklisted and henceforth cross debarred for participating in respective category of public procurement proceedings for a period of (not more than) six months, if fail to abide with a bid securing declaration, however without indulging in corrupt and fraudulent practices, if we are in breach of our obligation(s) under the Bid conditions, because we:

1. have withdrawn or modified our Bid during the period of Bid Validity specified in the Form of Bid;

2. Disagreement to arithmetical correction made to the Bid price; or

3. having been notified of the acceptance of our Bid by the Procuring Agency during the period of Bid Validity, (i) failure to sign the contract if required by Procuring Agency to do so or (ii) fail or refuse to furnish the Performance Security or to comply with any other condition precedent to signing the contract specified in the Bidding Documents.

We understand this Bid Securing Declaration shall expire if we are not the successful

Bidder, upon the earlier of (i) our receipt of your notification to us of the name of the successful Bidder; or (ii) twenty-eight (28) days after the expiration of our Bid.

Signed: [insert signature of person whose name and capacity are shown] In the capacity of
[insert legal capacity of person signing the Bid Securing Declaration]

Name: [insert complete name of person signing the Bid Securing Declaration]

Duly authorized to sign the Bid for and on behalf of: [insert complete name of Bidder]

Dated on day of , [insert date of signing]
Corporate Seal (where appropriate)

Contract Form

SECTION IX: CONTRACT FORMS

THIS AGREEMENT made the _____ day of _____ 20_____ between **SSGC (PROCUREMENT DEPARTMENT), DCM ST-4/B, Block 14, Sir Shah Suleman Road, Gulshan-e-Iqbal, Karachi, Pakistan**

(hereinafter called "the Procuring Agency") of the one part and *[name of Bidder]* of *[city and country of Bidder]* (hereinafter called "the Bidder") of the other part:

WHEREAS the Procuring Agency invited Bids for provision of goods, viz., **SSGC/LP/EPADS2/NR/2189309-2 (HARDWARE MATERIAL FOR WORKSHOP) (*P167424*)** and has accepted a Bids by the Bidder for the provision of Goods in the sum of *[contract price in words and figures]* (hereinafter called "the Contract Price").

NOW THIS CONTRACT WITNESSETH AS FOLLOWS:

1. In this Contract words and expressions shall have the same meanings as are respectively assigned to them in the Conditions of Contract referred to.

2. The following documents shall be deemed to form and be read and construed as part of this Contract, In the event of any ambiguity or conflict between the Contract Documents listed below, the order of precedence shall be the order in which the Contract Documents are listed below:-

1. This form of Contract;
2. the Form of Bids and the Price Schedule submitted by the Bidder;
3. the Schedule of Requirements;
4. the Technical Specifications;
5. the Special Conditions of Contract;
6. the General Conditions of the Contract;
7. the Procuring Agency's Letter of Acceptance; and
8. [*add here: any other documents*]

3. In consideration of the payments to be made by the Procuring Agency to the Bidder as hereinafter mentioned, the Bidder hereby covenants with the Procuring Agency to provide the Goods related services and to remedy defects therein in conformity in all respects with the provisions of the Contract.

4. The Procuring Agency hereby covenants to pay the Bidder in consideration of the provision of Goods and the remedying of defects therein, the Contract Price or such other sum as may become payable under the

provisions of the contract at the times and in the manner prescribed by the contract.

IN WITNESS whereof the parties hereto have caused this Contract to be executed in accordance with their respective laws the day and year first above written.

Signed, sealed, delivered by _____the _____ (for the Procuring Agency)

Witness to the signatures of the Procuring Agency:

……

Signed, sealed, delivered by _____the _____ (for the Procuring Agency)

Witness to the signatures of the Bidder: ……

PUBLIC PROCUREMENT REGULATORY AUTHORITY (PPRA) EPADS

Integrity Pact

Integrity Pact

DECLARATION OF FEES, COMMISSION AND BROKERAGE ETC. PAYABLE BYTHE SUPPLIERS OF GOODS, SERVICES & WORKS IN CONTRACTS WORTH RS.10.00 MILLION OR MORE

Contract Number: Contract Value: Contract Title:

Dated:

[Name of Supplier] hereby declares that it has not obtained or induced the procurement of any contract, right, interest, privilege or other obligation or benefit from Government of Pakistan or any administrative subdivision or agency thereof or any other entity owned or controlled by it (GoP) through any corrupt business practice.

Without limiting the generality of the foregoing [Name of Supplier] represents and warrants that it has fully declared the brokerage, commission, fee etc. paid or payable to anyone and not given or agreed to give and shall not give or agree to give to anyone within or outside Pakistan either directly or indirectly through any natural or juridical person, including its affiliate, agent, associate, broker, consultant, director, promoter, shareholder, sponsor or subsidiary, any commission, gratification, bribe, finder's fee or kickback, whether described as consultations fee or otherwise, with the object of obtaining or inducing the procurement of a contract, right, interest, privilege or other obligation or benefit in whatsoever form from GoP, except that which has been expressly declared pursuant hereto.

[Name of Supplier] certifies that it has made and will make full disclosure of all agreements and arrangements with all persons in respect of or related to the transaction with GoP and has not taken any action or will not take any action to circumvent the above declaration, representative or warranty.

[Name of Supplier] accepts full responsibility and strict liability for making and false declaration, not making full disclosure, misrepresenting fact or taking any action likely to defeat the purpose of this declaration, representation and warranty. It agrees that any contract, right interest, privilege or other obligation or benefit obtained or procured as aforesaid shall, without prejudice to any other right and remedies available to GoP under any law, contract or other instrument, be voidable at the option of GoP.

Notwithstanding any rights and remedies exercised by GoP in this regard, [Name of Supplier] agrees to indemnify GoP for any loss or damage incurred by it on account of its corrupt business practices and further pay compensation to GoP in an amount equivalent to ten time the sum of any commission, gratification, bribe, finder's fee or kickback given by [Name of Supplier] as aforesaid for the purpose of obtaining or inducing the procurement of any contract, right, interest, privilege or other obligation or benefit in whatsoever form from GoP.

Performance Guarantee Form

Performance Guarantee Form

To: **SSGC (PROCUREMENT DEPARTMENT), DCM ST-4/B, Block 14, Sir Shah Suleman Road, Gulshan-e-Iqbal, Karachi, Pakistan**

WHEREAS *[name of Bidder]* (hereinafter called "the Bidder") has undertaken, in pursuance of Contract No. *[reference number of the contract]* dated *[insert date]* for provision of Goods*(*hereinafter called "the Contract").

AND WHEREAS it has been stipulated by you in the said Contract that the Bidder shall furnish you with a Bank Guarantee by a reputable bank for the sum specified therein as security for compliance with the Bidder's performance obligations in accordance with the Contract.

AND WHEREAS we have agreed to give the Bidders guarantee:

THEREFORE, WE hereby affirm that we are Guarantors and responsible to you, on behalf of the Bidder, up to a total of *[amount of the guarantee in words and figures]*, and we undertake to pay you, upon your first written demand declaring the Bidder to be in default under the Contract and without cavil or argument, any sum or sums within the limits of *[amount of guarantee]* as aforesaid, without your needing to prove or to show grounds or reasons for your demand or the sum specified therein.

This guarantee is valid until the: *[insert date]*

Signature and seal of the Guarantors

_____

[name of bank or financial institution]

_____

[address]

_____

[date}

Annexure

SSGC/LP/EPADS2/NR/2189309-2

Information (Read-Only)

See Form Under Additional Forms and Documents: **SSGC/LP/EPADS2/NR/2189309-2** (page number: 70)

PUBLIC PROCUREMENT REGULATORY AUTHORITY (PPRA) EPADS

Procurement Forms

Historical Contract Non-Performance, and Pending Litigation and Litigation History

Format to be submitted on Rs. 100 Stamp paper.

See Form Under Additional Forms and Documents: **Historical Contract Non-Performance, and Pending Litigation and Litigation History** (page number: 108)

PUBLIC PROCUREMENT REGULATORY AUTHORITY
(PPRA)
EPADS

Additional Forms and Documents

Sui Southern Gas Company Limited

Checklist for Bidders

Enquiry #: _____ Opening Date: _____

Time: _____ M/s, _____

Please ensure before submitting the bid, that following information/ Documents have been submitted / providing along the bid. Kindly Check ( ) appropriate box.

Sr. No.	Checklist Item	Action Required	(Yes/ No)
1	**Tender Document Availability on SSGC website & EPADS**	Ensure the bidder participates via EPADS.	
		Download the tender document from EPADS.	
		Fill the BOQ/ Bid Form/ Schedule of Requirement correctly.	
		Submit the bid on EPADS before the deadline; otherwise, bid will be rejected.	
2	**Physical Bid Bond Submission**	Submit the physical bid bond to the Tender Room (SSGC HO) before the bid submission. And upload Scanned copy of Bid bond on EPADS.	
		If Bid Bond in original not submitted, the bid will be rejected.	
3	**Bid Submission Deadline**	Confirm all documents (electronic and bid bond in original) are submitted before the specified bid submission deadline.	
4	**Signature and Stamp**	Ensure all Tender documents attached in Annexure / Additional Forms & Documents Section of Standard Bidding Documents are duly signed and stamped and uploaded on EPADS or else bid will be liable for rejection.	
5	**Additional Documents (if any)**	Verify if any other documents specified in Tender document are included in the bid on EPADS	
6	**Tender Fees**	Rs. 0 (Free)	
7	**Technical literature**	Original Technical literature is enclosed, if any duly signed & stamped	
8	**Any change in your current address, Phone Fax no & Email etc. intimated**	Bidders are required to intimate Procurement dept. for any change in Current address, email, contact information etc. in tender documents	
9	**Bid validity**	Bid Validity as specified is mentioned	
10	**Delivery / Completion period**	Delivery / Completion period has been specified as per tender terms	
11	**Corrections/Cutting/Overwriting**	All corrections/cutting/overwriting are singed & stamped	
12	**Sample**	Sample (if necessary) is enclosed as per form attached in Tender Document	
13	**Form-X**	Form- X Duly Signed & Stamped	
14	**Price Schedule / Manual BOQ**	The Price Schedule and Manual BOQ (where applicable) of SSGC tender documents shall be duly filled in, signed, and stamped by the bidder and placed in the Financial folder submission. In addition, the bidder shall ensure that the Financial Form is electronically filled in and submitted through EPADS. Failure to comply with the above requirements shall render the bid liable to rejection in Single Stage–Two Envelope method. All bids shall be evaluated electronically through the EPADS system.	

Note:

Non-Availability of the above information/documents, or incomplete/incorrect statement on this checklist may result in rejection of the bid at / after the bid opening.

As per SRO296(1)/2023 dated 08th March 2023 "E-Pak Procurement Regulations, 2023" all bidders are advised to register in e-Pak Acquisition and Disposal System (EPADS).

Sui Southern Gas Co. Ltd. Procurement Dept. H.O. Gas House

_____

Bidders Authorized Representative

Sui Southern Gas Company Limited

Schedule of Requirement & Bid Form

SECTION - 3

RFQ_Number	SSGC/LP/EPADS2/NR/218930 9	Open Bidding Date	28-SEP-26 15:48
Document_Number	2189309	Close Bidding Date	10-NOV-26 10:00

S#	Item_Code	Item Description	Unit	Quantity	Make / Brand	Unit Price inclusive of all discount (if any) & Exclusive of GST	Value PKR
1	2	3	4	5		6	7 = 5 x 6
1	03018933	HARDWARE MATERIAL| MOULDING OF AXLE HUB END CAP SIZE : OVERALL LENGTH OF CAP 105MM (AS PER SPECS ATTACHED)	Each	30			
Delivery Schedule:		**Delivery period 45 to 60 days after confirmation of PO**					
2	03018943	HARDWARE MATERIAL| ROUND HEAD WHEEL STUD NUT WITH EXTERNAL THREAD SIZE : TOTAL STUD LENGTH (SL) 97MM, X TOTAL STUD DIA (SD) 22MM (AS PER SPECS ATTACHED)	Each	300			
Delivery Schedule:		**Delivery period 45 to 60 days after confirmation of PO**					
3	03018953	HARDWARE MATERIAL| WHEEL HUB DOUBLE ENDED STUD BOLT WITH EXTERNAL THREADING ON BOTH ENDS, SIZE : TOTAL STUD LENGTH: 129MM X 22MM DIA (AS PER SPECS ATTACHED)	Each	300			
Delivery Schedule:		**Delivery period 45 to 60 days after confirmation of PO**					
4	03018963	HARDWARE MATERIAL| FLANGE NUT OF SIZE M22 /M22+X1.5 PITCH (AS PER SAMPLE)	Each	300			
Delivery Schedule:		**Delivery period 45 to 60 days after confirmation of PO**					

Total Fix Bid Bond Amount PKR: 40,000

PUBLIC PROCUREMENT REGULATORY AUTHORITY (PPRA) EPADS

e-Pak Acquisition and Disposal System (EPADS) generated document | © 2026

NOTE:
1. The quoted unit price and corresponding total amount shall be inclusive of all duties and taxes and discount (If any) except General Sales Tax. (GST). Sales Tax will be applicable as per GST act and subsequent amendments of time to time. GST will be reimbursed to manufacturer and importers only subject to production of paid invoice.
2. Bidders are essentially required to quote on bid form. Rates quoted on other then bid form will not be entertained.
3. Any queries / complaints regarding subject tender enquiry shall be addressed to GM(P) / DGM(P) in writing
4. EVALUATION CRITERIA : Order will be placed on the Lowest Technically / Commercially Compliant bidder (s), unless specified otherwise.
5. In case when bidder submit alternate bids, a seprate Bid Bond for each bid is required. All the bidders are advised to furnish fixed bid security amount appearing in price schedule/BOQ otherwise bid will be liable for rejection.
The submission of fixed amount of bid security is also mandatory for all the bids valuing RS.500,000/- of less.
6. Any Bidder who change/amend the BOQ or Price Schedule (Description, Quantity, UOM etc.) will render the bid as conditional bid and will be liable for rejection.
7. Bid bond submission (2%) of the bid amount as mentioned in the clause 9 of General Terms & Conditions, to be treated as null & void, however, other contents of clause 9 will remain unchanged.
8. All offers shall remain valid up to 120 days from the date of opening of bids and bid bond shall remain valid for 150 days.
9. Special terms & conditions and warranty guaranty attached at annexure 01.

Signature : _____

Person Name : _____

Company's Name : _____

Date : _____

STAMP

End of page, any entry beyond this line would be invalid

Delivery Location: Khadeji Stores.
Note:
1. Original sample can be seen at MCU (P&C Department, KT) for bidders pre bid inspection, Mr. Abdul Rafay (AE-P&C) is the contact person for sample related any query.
2. The bidders have to submit the samples of their offered items with the bid (i.e. sample will be submitted at the time of bid opening at tender rood, H.O., Karachi).

e-Pak Acquisition and Disposal System (EPADS) generated document | © 2026

TERMS AND CONDITIONS (Ref# KDJ/BWS-I 53/2025-26)

Terms and conditions are in addition with general term and condition of the tender enquiry.

1	The indented items are categorized as General Consumables for the Base Workshop. The supplier is required to exercise due diligence in ensuring that the quoted items are fully compatible with the specified requirements. All items supplied shall be arrange from local market.
2	The detailed technical drawings of each item is enclosed with the Indent/Tender documents. The detailed dimension are specified in the engineering drawing.
3	Interested suppliers are requested to collect the samples from focal person (Engr. Lakhoo Mal & DCE. Abdul Jabbar Memon) at MCU Department, Project and Construction, Karachi Terminal for further clarification prior to bid and sample submission. Any non-compliance with the sample specifications shall result in rejection.
4	The bidder must clearly mention the make/brand of their offered items in RFQ.
5	It is compulsory for the bidder shall submit the samples at the time of bid opening. The samples shall be submitted as per the SOP of Form-Y.
6	The bidder/supplier shall submit undertaking that, the offered items shall meet with the specification.
7	The supplier/bidder shall be bound to deliver in-order stock of goods. If material found Rusted/defected /recycled/ Broken, the supplier will be bound to replace the same at their own risk & cost.

Abdur Rafay
Assistant Engineer (P&C)
ELP No 12256
Sui Southern Gas Co. Ltd.

ABDUL WAHEED MEMON
Deputy Chief Engineer
I/C BWS KHADEJI

Muhammad Noor
DGM (P&C)
Incharge Khadeji

Ghulam Ali Mahar
General Manager
Projects & Construction Deptt.

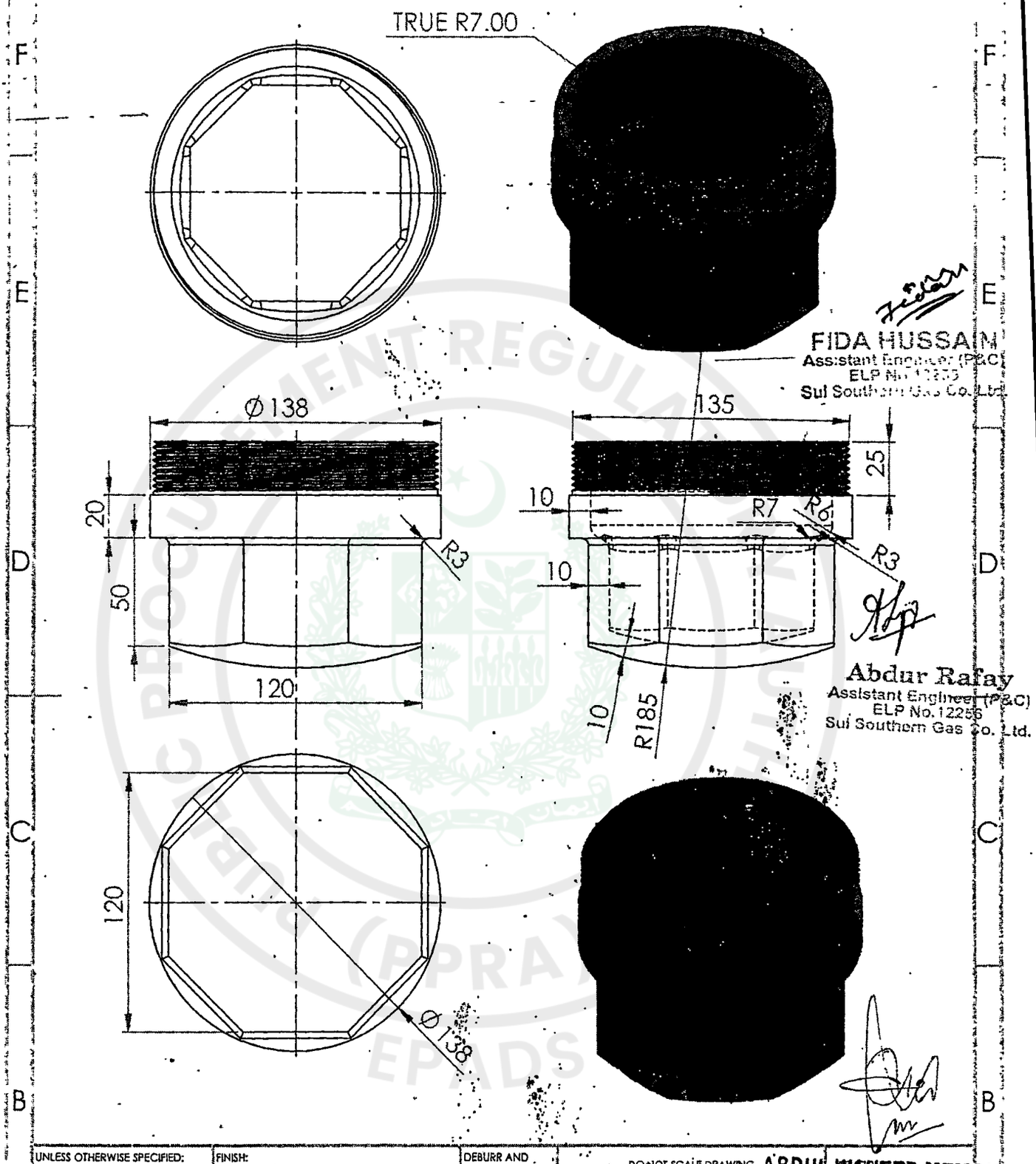

FIDA HUSSAIN
Assistant Engineer (P&C)
ELP No. 12339
Sui Southern Gas Co. Ltd.

Abdur Rafay
Assistant Engineer (P&C)
ELP No. 12256
Sui Southern Gas Co. Ltd.

ABDUL WAHEED MEMON
Deputy Chief Engineer
I/C BWS KHADEJI

UNLESS OTHERWISE SPECIFIED: DIMENSIONS ARE IN MILLIMETERS SURFACE FINISH: TOLERANCES: LINEAR: ANGULAR:	FINISH:
DEBURR AND BREAK SHARP EDGES	DO NOT SCALE DRAWING

	NAME	SIGNATURE	DATE
DRAWN			
CHK'D			
APPV'D			
MFG			
Q.A			

TITLE:

MATERIAL:

DWG NO: cap Hub axel end

A4

WEIGHT: SCALE:1:5 SHEET 1 OF 1

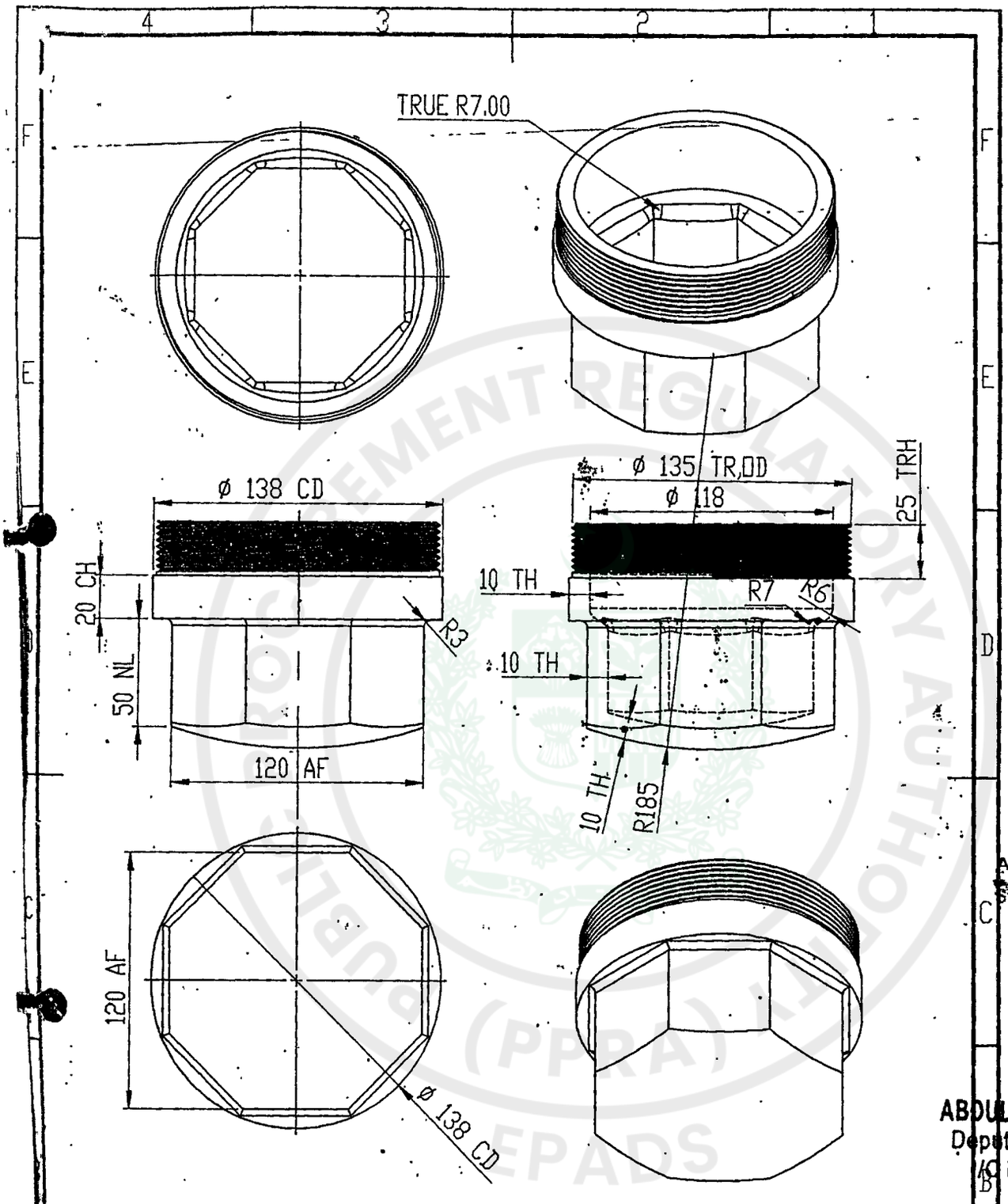

FIDA HUSSA
Assistant Engineer (P
ELP No.12255
Sui Southern Gas Co.

Abdur Rafay
Assistant Engineer (P&C)
ELP No.12256
Sui Southern Gas Co. Ltd.

ABDUL WAHEED MEMON
Deputy Chief Engineer
I/C BWS KHADEJI

UNLESS OTHERWISE SPECIFIED: DIMENSIONS ARE IN MILLIMETERS SURFACE FINISH: TOLERANCES: LINEAR: ANGULAR:	FINISH:	DEBURR AND BREAK SHARP EDGES.	DO NOT SCALE DRAWING	REVISION	
	NAME	SIGNATURE	DATE	TITLE:	
DRAWN					
CHK'D					
APPV'D					
MFG					
Q.A					
	MATERIAL: cap			DWG NO. Hub axel end labeled	A4
	WEIGHT:			SCALE:1/5	SHEET 1 OF 1

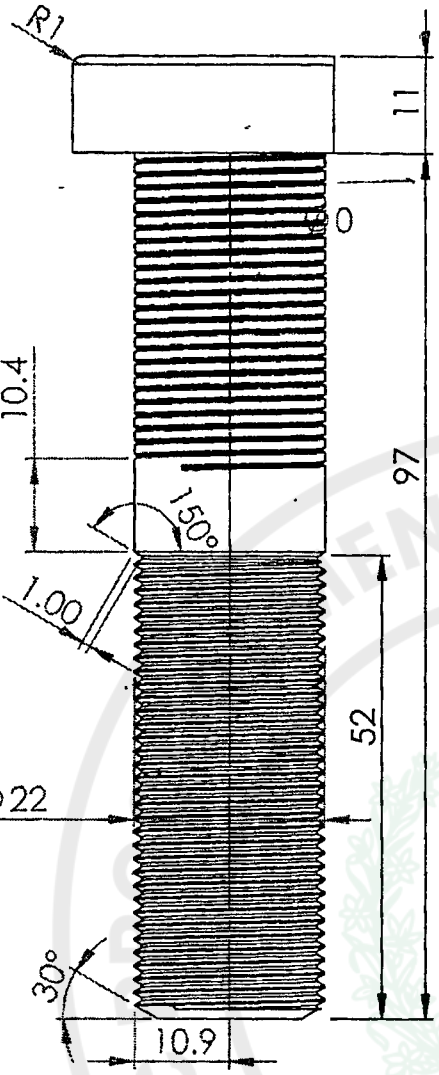



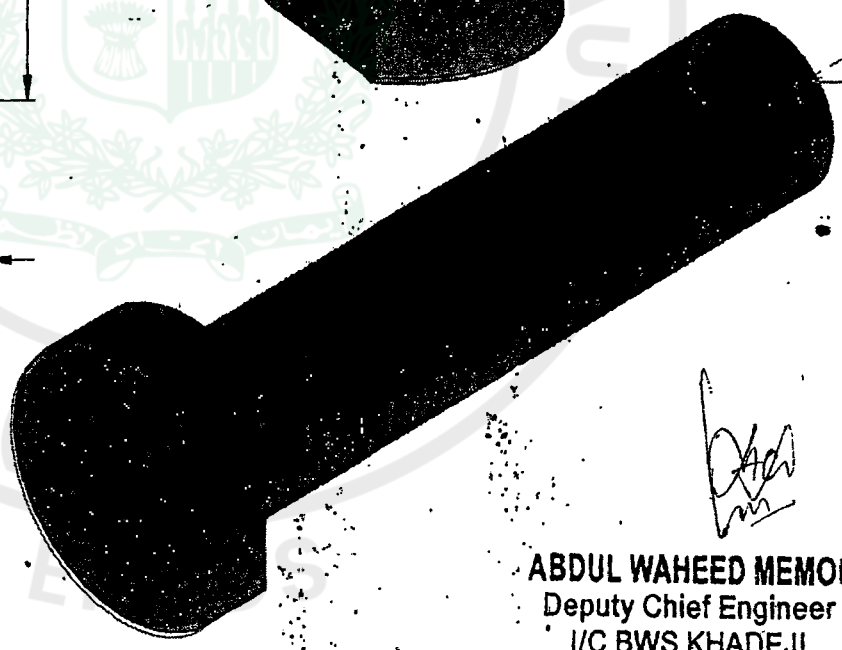

FIDA HUSSAIN
Assistant E[illegible]neer (P&C)
ELP No. [illegible]
Sui Southern Gas Co. Ltd.

ABDUL WAHEED MEMON
Deputy Chief Engineer
I/C BWS KHADEJI

UNLESS OTHERWISE SPECIFIED: DIMENSIONS ARE IN MILLIMETERS SURFACE FINISH: TOLERANCES: LINEAR: ANGULAR:	FINISH:	DEBURR AND BREAK SHARP EDGES	DO NOT SCALE DRAWING / REVISION

	NAME	SIGNATURE	DATE
DRAWN	Fida Hussain AE		
CHK'D	Abdur Rafay AE		
THRO	Abdul waheed DCE		
APP'VD	Muhammad Noor DGM		
MFG			
Q.A			

TITLE: **Round head wheel stud**

MATERIAL: | DWG NO. | A4

WEIGHT: | SCALE:1:1 | SHEET 1 OF 1

TECHNICAL SPECIFICATIONS

GENERAL CONSUMABLE ITEM FOR BASE WORKSHOP

Sr.No	Item Description	Technical Specs.
1	Moulding of Axle Hub End Cap	External Hex Head with Male threaded body, Shoulder Seating surface, Solid Closed End, Material: Aluminium Casting, with Specification: Overall Length of Cap: 105mm, Across Flats (AF): 120mm, & Nut Head Length (NL): 50mm. Thread OD (TD): 135mm, & Height (TH): 25mm, Pitch: 3mm. & RH-Side Thread. Collar Diameter (CD): 138mm, & Length (CL): 20mm, (As Per Sample)
2	Round Head Wheel Stud Nut	External Thread, Nut Head: Ø36mm X 11 mm Height with section at 30mm; Material: High- Strength Carbon Steel or Alloy Steel Grade-08, with Specification; Total Stud Length (SL): 97mm, & Total Stud Dia (SD): 22mm. Thread Length (TL): 52mm & Thread Dia (TD): 22mm, Pitch 1.5mm, RH Thread. Collar Dia (CD): 22mm & Collar Height (CH): 11mm. Knurl Dia: Ø22mm & Knurl Length (KL): 34mm, with compitable Flange Bolt M22 X 1.5. (As Per Sample)
3	Wheel Hub Double Ended Stud Bolt	External threading on both Ends, Material: High Strength Carbon Steel or Alloy Steel Grade-08, With Specification: Total Stud Length: 129mm, One side has Grooves: Ø23 X 44-Nos, Thread Length: 47mm, thread Pitch: 1.5mm, LH thread with Compitable M22 X 1.5 Hex Bolt. Shoulder with Key: Ø32 X 6mm thick; Other side has; Knurl: Ø22 X 20mm length; Thread Length: 47mm, thread Pitch: 1.5, RH thread with compitable M22 X 1.5 Flange Bolt.
4	Flange Nut	M22/M22+ X 1.5 Pitch (As Per Sample)

Note: Samples are avaiable at Base Workshop Khadeji for Bidders Inspection.

INDENTOR

Abdul Hafay
Assistant Engineer (P&C)
Sui Southern Gas Co. Ltd.

Muhammad Younis
Engineer (M) (P&C)
Ex. No. 9835
Sui Southern Gas Co. Ltd.

DCE
I/C BWS KDJ

ABDUL WAHEED MEMON
Deputy Chief Engineer
I/C BWS KHADEJI

Muhammad Noor
DGM (P&C)
Incharge Khadeji

DGM
P&C KKD

GM
P&C KT

Ghulam Ali Mahar
General Manager
Projects & Construction Deptt.

Tender Enquiry No. SSGC/LPI

Special Conditions of Tender Document

Note: In case of any conflict between Special Conditions of Tender Document and any other terms & conditions, the Special Conditions of Tender Document will govern / prevail.

1. **Warranty / Guarantee Coverage**

i) The successful bidder / supplier guarantee that the goods supplied against above tender enquiry are in all respect in accordance with the tender specifications & Purchase Order and that material used are in accordance with the latest approved standards and are of good workmanship / quality. Any item or part of item if found to be substandard or not meeting the specified criteria as per inspection carried out at stores. Than in such as event the Supplier / bidder hereby warrants and undertake to replace the same on Duly Delivery Paid (DDP) basis (INCOTERMS 2010) i.e. Free of all cost including but not limited to transportation. Taxes and levies. In case successful bidder / supplier failure to replace the defective item / remove the defect(s) free of cost within the period specified by the Purchaser, the successful bidder / supplier will refund the relevant cost including all other expenses incurred by the purchaser in this regard.

ii) The successful bidder / supplier must confirm that the warranty for non-consumable items will remain valid for 18 months and for consumable items (i.e. Chemical, Battery etc.) will remain valid for 6 months after the goods have been successfully delivered or commissioned.

iii) It is mandatory that the successful bidder / supplier will submit the attached undertaking at Annex-I, duly filled, signed & stamped.

iv) In case where performance guarantee is not applicable, the supplier shall confirm that all supplied goods under the contract / purchase order are new, unused, of most recent or current models and incorporate all recent improvements in design and goods unless and otherwise provided in the contact / purchase order.

v) The Warranty Undertaking being provided by the successful bidder is required to be submitted at least on Rs.200/— Non-judicial Stamp paper and should be duly notarized / attested.

vi) In case of Supply, Installation, Testing & Commissioning, since all these activities are inter-related to each other, therefore, the payment of supplies will be released after successful installation, Testing & Commissioning.

2. **Bid Security:**

a) Bid bond submission (2%) of the bid amount as mentioned in the clause 9 of General Terms & Conditions, to be treated as null & void, however, other contents of clause 9 will remain unchanged. The submission of fixed amount of Bid security is appearing in the Schedule of Requirement/Bid Form.

b) All the bidders are advised to furnish fixed bid security (Original Instrument) as per amount appearing in Schedule of Requirement/Bid Form, failing which their bid will be rejected.

c) The submission of fixed amount of bid security is also mandatory for all the bids valuing Rs.500,000/- or less.

d) The word lowest bidder or the lowest evaluated bid has been substituted to read as most advantageous bid.

e) Sub-clause 9.2 of the General Terms & Conditions to be treated as null & void, however, other contents of clause 9 will remain unchanged.

3. **Method For Submission of Bid Bond (Under Single Stage Two Envelope Bidding Procedure):**

In case of Single Stage Two Envelope Tenders the fixed bid bond as per clause-09 of General Terms & Conditions to be placed in the Technical Proposal. However, if the bid bond is placed in the financial proposal will also be considered. Without submission of bid bond (either in Technical proposal or financial proposal) the bid will be rejected.

4. **Bid Validity:**

All offers shall remain valid up to 120 days from the date of opening of bids and bid bond shall remain valid for 150 days.

5. **Declaration / Integrity Pact / Certification:** It is required to be submitted by the Successful Bidder on their letterheads after issuance of Purchase Order (PO) or Letter of Intent (LOI), for the value of Rs.10,000,000/- (Ten Million) or above. ANNEXURE-C is a mandatory requirement for successful bidder.

6. **Stamp Duty:**

"The successful Bidder shall provide the copy of challan and revenue stamp, of value at the rate of twenty five (25) paisa per every hundred Rupees or part thereof of the amount of the purchase order, or at the prevailing rate as specified by the Government of Province of Sindh." Further as per Government of Sindh Board of Revenue notification NO.CIS/SWB/BOR/R&T-17/2022-808 dated 08-06-2022 all judicial and non-judicial stamp paper of the denomination of rupee five hundred and above shall be exclusively on e-stamp.

7. **Cancellation of Purchase Order**

In case the supplier fails to deliver the material within the specified delivery schedule as given in Purchase order (P.O.) and maximum upto 240 days after the expiry of the specified delivery schedule as per Purchase Order, the Purchase Order may be treated as cancelled at supplier's sole risk & cost. However, for the sake of clarity liquidated damages (Clause-27 of General Terms Conditions) and Default by Supplier (Clause-29 of General Terms Conditions) will be treated as given in the General Terms & Conditions of the tender documents.

Southern Gas Co. Procurement Dept.

e-Pak Acquisition and Disposal System (EPADS) generated document | © 2026

8. Correct Postal Address.
Bidder are essentially required to provide correct and latest postal, e-mail & web address, Phone/cell/fax numbers at the time of purchase of tender documents for effective and timely communication, failing which in event of any non-delivery of information /communication the procuring agency will not be held responsible and bid will be considered as non-responsive.

9. "In case the local agent requires to offer bid from more than one principal / Manufacturers, it is mandatory to purchase separate tender document for each principal / Manufacturer, failing which the bid submitted with the original tender document will only be accepted and the bid with photocopy of tender document will be rejected".

10. "Original counter slip of token which is issued with original tender document to be attached on the TOP of envelope at the time of bid submission".

11. The Successful Contractor(s) / Consultant(s) shall submit a copy of Professional Tax Certificate with their invoice / Bills failing which the payment will not be released.

12. ***Blacklisting Mechanism of Suppliers and Contractors and their Local Agent:***
Black listing mechanism is attached separately in the tender documents which will become an integral part of Tender Documents and now be followed / enforced in true letter & sprit and supersede the Black listing terms as mentioned in the General Terms & Conditions.

13. ***Bid Bond & PBG (Performance Bank Guarantee) for Proprietary Tenders***
In case of proprietary Tenders, the Bid Bond & Performance Bank Guarantee (PBG) are not required / Applicable.

14. ***Any Bidder who change / amend the BOQ or Price Schedule (description, Quantity, UOM etc.) will render the bid as conditional bid and will be liable for rejection.***

15. ***Clause 14.1 of General Terms & Conditions is meant for vendorized items processed through negotiated tendering clauses.***

16. ***For open competitive bidding if the most advantageous bidder is new local manufacturer, 10% trial order will be placed and remaining 90% order will be awarded to the next most advantageous bidder at their own quoted rates.***

16(a) Bidders awarded a trial order (10% of the complete order) shall, upon successful delivery and satisfactory performance, be allowed to participate in future tenders of the same item; however, until completion of the trial order, they will be declared technically non-compliant by the user department as per the above-mentioned clause in the Special Terms & Conditions. During the currency of the trial order, they will not be issued further POs until the trial order is successfully completed.

17. ***SSGC will not pay invoices if they are turned in after 6 months of work completion / material delivered.***

18. It is mandatory for the bidders to follow all the terms and conditions given in the tender documents without any addition / deletion / amendment and submit the bid accordingly. Therefore, in this context, the bidders are requested not to give their own terms and conditions as it tantamount towards the conditional bid. Otherwise their terms and conditions will not be considered and the Purchase Order / Contract will be awarded based on only as per SSGC tender terms and conditions.

19. *The bidders/contractors are required to provide their only one Bank Account number (IBAN number) on the 'FORM-X' attached duly signed & stamped as one time information, which shall be firm (not changeable) for all the future payment transactions.*

20. Payment:
The supplier after delivery of goods and its acceptance shall submit invoice to Finance Department of the Company, containing following information i.e.:

(a) Purchase order No. & date
(b) Items
(c) Quantity
(d) Price
(e) Invoice value
(f) Point of delivery
(g) Delivery challan indicating delivery date, etc.
(h) Supplier(s) are required to submit signed and stamp acknowledgement slip, Sales Tax return, Annex "C" & Annex "I" (whichever applicable) in which Sales Tax (of relevant Sales Tax invoice) is paid.

Payment will be made within 30 days of completion of stated requirements.

21. Joint Ventures: In the event that the bidder is bidding as a Joint Venture, the Company will require the joint venture agreement duly executed by the parties to the Joint Venture to be submitted with the bid. The joint venture parties shall also furnish an undertaking to be jointly and severally liable for all liabilities arising out of obligation under the Purchase Order / Contract. The, Joint Venture agreement of the parties must specify share of each partner and name of the lead partner along with their registration with the FBR, SST and BST as the case may be failure to specify these two narrations the joint venture agreement will not be entertained.

LT-Rev 29
01 July 2026

Sui Southern Gas Co. Ltd. Procurement Dept.

e-Pak Acquisition and Disposal System (EPADS) generated document | © 2026

22. *Bank Guarantee (Bid Bond Guarantee/Performance Bank Guarantee) w[illegible] judicial stamp paper of the prevailing rate as specified by the respective [illegible]. Further the bidder/contractor submitting the Bid Bond guarantee/Performance Bond guarantee being prepared by the State Bank's schedule banks should ensure that there should be no deletion/insertion/alteration/modification of any terms in the Bid Bond/PBG guarantee format as given in the tender document or else bid will be liable for rejection.*

23. *In case the insurance policy submitted by the contractor is expired during the execution of job, it is the responsibility of the user department to coordinate with the contractor to get it renewed/updated till the period the job is completed/commissioned.*

In case the job is not completed within the given time as per tender terms and the insurance policy submitted by the contractor expires, the contractor is liable to get this insurance policy renewed / updated immediately till the period of the job is completed / commissioned as per tender terms failing which the contractor will be responsible for any loss to SSGC.

24. *Bidders can quote their rates on both i.e. Schedule of Requirement/Bid Form as well as Bill of Quantity (BoQ).*

25. *Company reserve the right to award the Purchase Order /LOI to the most advantageous bidder.*

26. *As per SRO 592(I)/2022 of PPRA Regulations, for Procurement Contracts/Purchase Orders worth of Rs. 50 million and above, bidders/contractors are required to submit the Beneficial Owner's Information for Public Procurement Contracts/Purchase Orders (Annexure-I).*

27. <u>Fixed Bid Security – Alternative Bid</u>

A bidder cannot submit two bids/offers with a single fixed bid security/pay order However, the alternative bids/offers with separate fixed bid security/pay order can be accepted, failing which the bids will be liable for rejection. In case the bidder quote different make/brands/model that will also be considered as an Alternative bid/offer and require to submit separate Bid bond for each make/brand/model.

28. Bidder will be blacklisted and henceforth cross debarred for participating in respective category of Public Procurement proceedings for a period of (not more than) six months, if fail to abide with a bid securing declaration (which is an integral part of tender document), however, without indulging in corrupt and fraudulent practices, if in breach of obligation(s) under the Bid conditions:

a) The bidder have withdrawn or modified their bid during the period of bid validity as specified in the tender terms.

b) Having been notified of the acceptance of bid by procuring agency during the period of bid validity (i) failure to sign the contract or accept purchase order (ii) fail or refuse to furnish the performance security or to comply with any other condition as mentioned in the tender document.

29. Wherever the "Rate Only" is mentioned (either on BOQ or anywhere in tender documents) the same shall only be applicable not exceeding 15% of the original procurement for the same items as given in the BOQ for package basis. In case the requirement is on item wise basis (not package basis) then not exceeding 15% of the original Procurement for the same items (on item wise basis) as given in the BOQ.

30. Lots: In case when the tender is floated on LOT basis, following clauses to be applied:

a) The bidder(s) are essentially / mandatorily required to submit fixed bid bond as mentioned in the bid form/BOQ/Invitation to Bid. Separate fixed bid bond to be submitted against each individual LOT and its validity to be 150 days at the time of opening of technical proposal.

b) Evaluation for each LOT will be carried out separately. Each LOT will be awarded separately.

31. Subsequent to the issuance of Purchase Order/LOI, successful bidder has to submit 10% Performance Bank Guarantee of the Purchase Order/LOI value unless & untill specified in the Tender Documents. Clause# 16.1.5 mentioned in General Terms & Conditions to be treated as null & void.

32. Redressal of Grievances And Settlement of Disputes:

- Any bidder feeling aggrieved by any act of the procuring agency after the submission of his bid may lodge a written complaint concerning his grievances within seven days of announcement of the technical evaluation report and five days after issuance of final evaluation report.
- In case, the complaint is filed against the technical evaluation report, the GRC shall suspend the procurement proceedings.

Sui Southern Gas Co Ltd. Procurement

e-Pak Acquisition and Disposal System (EPADS) generated document | © 2026

- In case, the complaint is filed after the issuance of final evaluation report, the complainant cannot raise any objection on technical evaluation of the report. Provided that the complainant may raise the objection on any part of the final evaluation report in case where single stage single envelope bidding procedure is adopted.

33. The sub clauses 33.2, 33.4 & 33.5 of clause 33 of General Terms & Conditions to be treated as null & void.

34. All the bidders are allowed to participate in the subject procurement without regard to nationality/origin, except bidders of some nationality/origin, prohibited in accordance with policy of the Federal Government. Following countries are ineligible to participate in the procurement process:
- India
- Israel

35. In Open Competitive Bidding Procedure where the quoted price is less than Rs. 500,000/- the Bid Bond will be retained in lieu of PBG.

36. In case the Bid Bond is not required, the bidder must submit the Form of Bid-Securing Declaration attached with the Tender Document else the Bid will be liable for rejection.

37. All Tenders floated through EPADS are to be governed by S.R.O. 296(I)/2023 dated: March 8, 2023 "E-Pak-Procurement Regulations 2023". In case of any conflict between SSGC Tender Terms / Instructions to Bidders and the PPRA EPADS Rules, the S.R.O. 296(I)/2023 will prevail.

38. **Samples:**
When sample submission is required: Suppliers/bidders must submit samples:
a) Along with the bid, if stated in the tender documents.
b) Within the time specified in the tender.
c) Upon request from the User Department for technical evaluation through official email/ letters.

SAMPLE SUBMISSION LOCATION/ DEPARTMENT:
All samples must be submitted to the Procurement Department - Tender Room, SSGC Head Office with Duly filled in form "Y" attached in the tender document. Samples submitted other than the Procurement Department - Tender Room, SSGC Head Office will not be considered/accepted.

The supplier/bidder must:
- Fill in all required details (e.g., Tender No., Bidder Name, and Sample Description).
- Attach supporting documents (if required).
- Submit the completed Form-Y along with the sample.

In absence of any of the above stated requirements the Samples will not be considered/accepted.

Sui Southern Gas Co. Ltd. Procurement Dept. H.O. Gulshan e Iqbal

Sui Southern Gas Company Limited

FORM "Y"

(SSGC – sample submission form)

SECTION A: BIDDER INFORMATION	
FIELD	**DETAILS**
Bidder Name / Firm Name	
NTN / GST No.	
Address	
Contact Person	
Contact Number	
Email Address	
Declaration by Bidder	
I/We hereby declare that the sample(s) submitted are in accordance with the tender specifications and terms. I/We understand that failure to submit correct and complete samples may lead to disqualification.	
Signature of Bidder:	

SECTION B: TENDER DETAILS	
FIELD	**DETAILS**
Tender No.	
Tender Opening Date	
Item(s) for which sample is submitted	
Quantity of Sample Submitted	
Specification/Description of Sample	
Make:	
Brand:	
Serial No:	
Generics: size, height, weight, width:	
Other description:	

SECTION C: FOR OFFICE USE ONLY (TO BE FILLED BY TENDER ROOM)	
FIELD	**DETAILS**
Date & Time of Submission	
Received By (Tender Room Staff Name & Sign)	
Tender Room Stamp	
Remarks (if any)	

PROCUREMENT REGULATORY AUTHORITY (PRA) EPADS

Form of Bid-Securing Declaration

[The Bidder shall fill in this Form in accordance with the instructions indicated.]

Date: *[date (as day, month and year)]*
No.: *[number of Bidding process]*
Alternative No.: *[insert identification No if this is a Bid for an alternative]*

To: *[complete name of Procuring Agency]*

We, the undersigned, declare that:

We understand that, according to your conditions, Bids must be supported by a Bid-Securing Declaration.

We accept that we will be blacklisted and henceforth cross debarred for participating in respective category of public procurement proceedings for a period of (not more than) six months, if fail to abide with a bid securing declaration, however without indulging in corrupt and fraudulent practices, if we are in breach of our obligation(s) under the Bid conditions, because we:

(a) have withdrawn our Bid during the period of Bid validity specified in the Letter of Bid; or

(b) having been notified of the acceptance of our Bid by the Procuring Agency during the period of Bid validity, (i) fail or refuse to sign the Contract, or (ii) fail or refuse to furnish the Performance Security (or guarantee), if required, in accordance with the ITB.

We understand this Bid Securing Declaration shall expire if we are not the successful Bidder, upon the earlier of (i) our receipt of your notification to us of the name of the successful Bidder; or (ii) twenty-eight days after the expiration of our Bid.

Name of the Bidder*_____

Name of the person duly authorized to sign the Bid on behalf of the Bidder**_____

Title of the person signing the Bid_____

Signature of the person named above_____

Date signed _____ day of _____

*: In the case of the Bid submitted by joint venture specify the name of the Joint Venture as Bidder

**: Person signing the Bid shall have the power of attorney given by the Bidder attached to the Bid

[Note: In case of a Joint Venture, the Bid-Securing Declaration must be in the name of all members to the Joint Venture that submits the Bid.]

Sui Southern Gas Co. Ltd. Procurement Dept.

Supplier code: _____

FORM-X

Bank account details form for all Beneficiaries

(Mandatory requirement for Digital Online Banking)

As per FBR Regulations ref # C.No.4 (24) IT-Budget/2021-142150-R dated 23rd Sept 2021 to make the payment online w.e.f. 01-11-2021. All beneficiaries are required to fill in the below details, which is mandatory;

Name of Firm: _____

Address of Firm: _____

_____

CNIC #: _____

NTN #: _____

Bank Name: _____

Bank A/C Title name: _____

Branch code: _____

Bank A/c #: _____ (16 Digits)

Bank IBAN #: _____ (24 Digits)

☐ Information already submitted.

Note: Please be attached copy of Cheque / Account Maintenance Certificate.(Mandatory)

_____

Authorized Sign & Stamp

Date: _____

Note: All payments transactions will be made on above mentioned Account details. This is only a one time information to be provided by the all beneficiaries. Incase if the above detail has already submitted, please tick the box above "Information already submitted" and also ensure Form-X is duly signed & stamped.

SOUTHERN GAS CO. LTD. PROCUREMENT Sept.

PUBLIC PROCUREMENT REGULATORY AUTHORITY (PPRA) EPADS

ANNEXURE- I

Declaration of Ultimate Beneficial Owners Information for Public Procurement Contracts.

1. Name
2. Father's Name/Spouse's Name
3. CNIC / NICOP/Passport No.
4. Nationality
5. Residential address
6. Email address
7. Date on which shareholding, control or interest acquired in the business.
8. In case of indirect shareholding, control or interest being exercised through intermediary companies, entities or other legal persons or legal arrangements in the chain of ownership or control, following additional particulars to be provided:

1	2	3	4	5	6	7	8	9	10
Name	Legal form (Company/Limited Liability Partnership /Association of Persons/Single Member Company/Partnership Firm/Trusted/Any other Individual, Body Corporate (to be Specified)	Date of Incorporation / Registration	Name of Regulating Authority	Business Address	Country	Email Address	Percentage of shareholding control or interest of BO in the Legal Person or Legal Arrangement	Percentage of shareholding, Control or Interest of Legal Person or Legal Arrangement in the Company	Identity of Natural Person who Ultimately owns or Controls the Legal Person or Arrangement

9. Information about the Board of Directors (details shall be provided regarding number of shares in the capital of the company as set opposite respective names).

e-Pak Acquisition and Disposal System (EPADS) generated document | © 2026

1	2	3	4	5	6	7	8
Name and surname (in block Letter's)	CNIC no (in case of foreigner Pessport No)	Father's / Husband's Name in Full	Current Nationally	Any other Nationality lies)	Occupation	Residentially address in full of the registered / principle office address for a subscribers other that natural Person	Numbers of shares taken by cash subscribers (in figures and words
			Total numbers of shares taken (in figures and words)				

10. Any other information incidental to or relevant to beneficial owner(s).

Name and signature
(Person authorized to issue notice on behalf of the company)

PUBLIC PROCUREMENT REGULATORY AUTHORITY (PPRA) EPADS

Sui Southern Gas Company Limited (SSGCL)

Contents

Part – A		
Section – 1	**General Terms & Conditions**	Included
Section – 1A	**Additional Terms & conditions for FOB /C&F**	Included
Section – 2	**Special Terms & Conditions**	Included /Not required
Annexure–A	**Format of Bid Bond Bank Guarantee**	Included
Annexure–B	**Format of Performance Bank Guarantee**	Included
Annexure–C	**Declaration by Supplier**	Included /Not required
Part – B		
Section – 3	**Bid Form (Schedule of requirement)**	Included
Section – 4	**Specifications/Drawing (if applicable)**	Included /Not required

Sui Southern Gas Co. Ltd. Procurement Dept. K.O Gulshan-e-Iqbal

SSGC

SUI SOUTHERN GAS COMPANY LIMITED
Procurement Department

M/s. _____
_____
_____

Tender Enquiry No. _____

INVIATION TO BID

Sui Southern Gas Company Limited, (SSGCL) has pleasure in extending you an invitation, to submit bid for the subject material according to Terms and Conditions specified in the attached Tender Document. Please read following instructions before submission of bid:

1. Bids are to be submitted in sealed envelope provided with the tender, indicating Tender Enquiry Number & its opening date and time on the face of the envelope.
2. Bid Bond @ 2% of the total FOR / FOB value shall be enclosed with the bid without which bid will be rejected and returned to bidder unannounced. The Bid Bond shall remain valid till the last date of the month in which it is expiring.
3. In case the bid opening date falls on a holiday or due to some unavoidable circumstances, it is not possible to open on scheduled date, it will be opened on next working day at the same time and at the same venue.
4. The bidder shall bear all expenses associated with the preparation and delivery of its bid/sample and the Company will in no case be liable in this respect.
5. Prospective bidder requiring any information or clarification of the tender may notify the same by fax or at the mailing address. The Company will respond to any request for explanation or clarification, if received within reasonable time prior to submission of bids.
6. The Company reserves the right to cancel, add, delete or amend tendered items/quantities/any part of the tender during the bidding period without assigning any reason. However, bidders shall be informed about it prior to bid opening/process.
7. The Company reserves the right to accept or reject any bid or part of a bid or to annul the bidding process and reject all bids at any time prior to award of contract/purchase order without thereby incurring any liability to the affected bidder(s).
8. In case of Single stage two (02) envelope bidding procedure (if mentioned in press advertisement & Tender document), sealed technical offer & sealed bid shall be submitted in separate envelopes Bid Bond will be enclosed with "commercial" bid. "Technical Proposal" and "Financial Proposal" is to be mentioned on the top of the envelope. Technical offers will be opened and evaluated first. Financial offers of only technically compliant bidders will be opened at a later intimated date in presence of bidder's representatives. Financial proposal of technically non-compliant bidders will be returned un-opened along with their bid bond.
9. For Tenders invited on F.O.B/C&F basis, conditions as mentioned in Section-1A will also apply.
10. The Company will appreciate confirmation by fax No 92-21-99231583 or email at mmte@ssgc.com.pk or to DGM (Procurement) of your intention to submit the bid and if not interested in submission of bid, it will be appreciated if it is intimated through fax or email with mentioning of reasons.
11. Bids are required to be submitted at:

    Tender Room, CRD Building, Head Office Complex, Sir Shah Suleman Road Gulshan-e-Iqbal, Karachi Pakistan. Ph. 0092-21-99021024, 0092-21-[redacted], 0092-21-99021279, 0092-21-99013074, Fax # 0092-21-99231583, Email: mmte@ssgc.com.pk

Hope and look forward for your valued participation.

Thanking you

Yours sincerely

General Manager (Procurement)

Sui Southern Gas Co. Ltd. Procurement Dept. H.O. Gulshan-e-Iqbal

e-Pak Acquisition and Disposal System (EPADS) generated document | © 2026

SSGC

Section – I

General Terms & Conditions

1. **Submission of bids:**

1.1. Bids are to be submitted in sealed envelope provided with the tender (in such a manner that contents are fully kept enclosed and cannot be seen until opened) indicating tender enquiry number, its opening date and time on the top of the envelope. Envelopes shall be addressed to General Manager (Procurement Department) on the address provided on "invitation to bid". Envelope shall indicate the name and address of the bidder for returning the bid in case it is declared late or submitted without bid bond.

1.2. Sealed bids (as above) shall be mailed/submitted/dropped in tender box placed at Tender Room, CRD Building, SSGC Head Office. Bids are to be delivered on or before closing time after which bid will not be entertained. In case bid is sent through courier, the same shall be delivered at least half an hour before scheduled opening time.

1.3. The Company may at its discretion extend the closing date for the submission of bids, in which case all rights and obligations of the purchaser and bidders previously subject to the closing date will thereafter be subject to the date extended. However, any request for extension received from prospective bidders less than one week prior to bid opening date may not be entertained. In case of extension in bid opening date, the same will be advertised in press and simultaneously shall be intimated to prospective bidder who had purchased the tender documents.

1.4 The bid shall contain no interlineations, erasures or overwriting except as necessary to correct the errors made by the bidder, in case of any correction etc. it shall be signed and stamped by the person signing the bid.

1.5. The quoted price shall be inclusive of all duties/taxes except GST, which is to be mentioned separately. The supplier shall declare (if applicable) regarding non-applicability of GST for which documentary evidence shall be enclosed or could be produced upon demand.

1.6. Rates shall be item-wise, as given in price schedule/schedule of requirement/Bid Form unless otherwise specified.

1.7. Bidder is responsible for timely delivery of bids at location specified 1.2 above. Company will not be responsible for misplacement/ tampering/non-attendance/delay or any other incident in case the bid is not delivered at the designated place & time.

1.8. Any bid received late after the closing date and time, will be rejected and returned unopened.

1.9 The quotation shall only be acceptable on/as per Bid Form. In case for foreign tender when Local Agent submits bid on behalf of different bidders, a separate Bid Bond for each Bid is required. Likewise for tender when bidder submit alternative bids a separate bid bond for each bid is required or else bid will be liable for rejection.

1.10 Deviation from tender terms and conditions isnot allowed. However, in unavoidable circumstances, these shall be mentioned at the bottom of "Section 3: Bid Form" deviation on any other page will not be entertained.

1.11 Discount offered (if any) shall be mentioned on the "bid form" only.

1.12 The bidder(s) or their authorized representative shall put his full signature with stamp & date on each page of tender document as well as enclosure vis-a-vis drawings, specifications etc. Any correction, overwriting shall be duly signed & stamped.

1.13 The bid is to be completed and returned to the Company in accordance with, General terms & conditions. General terms & conditions duly signed & stamped (as a token of acceptance) shall be submitted along with Bid Form (Price schedule) duly completed as per requirement. However, specifications/drawing is to be retained by bidder for their future references.

2. **Eligible Countries / bidders:**

The invitation for bids is open to all manufacturers/suppliers/stockiest/dealers/pre-qualified bidders but is not applicable to those countries where inter trade protocols with Pakistan do not exist or those countries from where imports are not allowed by Government of Pakistan.

3. Qualification/Disqualification of Suppliers:

The Company, at any stage [illegible] Please Follow the Attached Block Listing Mechanism [illegible], having credible reasons for or prima facie evidence of any defect in su[illegible]ies, may require the suppliers or contractors to provide information regarding their professional, technical, financial, legal or managerial competence.

Please Follow the Attached Block Listing Mechanism

Sui Southern Gas Co. Ltd. Procurement Dept.

whether already pre-qualified or [redacted] Company shall disqualify a supplier or contractor if it finds, at any time that the information regarding [redacted] supplier or contractor was false and materially inaccurate or incomplete.

4. **Joint Ventures:**

In the event that the successful bidder is a joint venture (formation of two or more companies), the Company will require an undertaking on judicial stamp paper that the parties to the joint venture accept joint and several liabilities for all obligations under the purchase order/contract.

5. **Clarification of tender documents:**

Prospective bidders requiring any further information or clarification of the tender documents may notify, the Company in writing or by fax or at the Company's mailing address indicated in the "invitation to bids". The Company will respond in writing to any request for information or clarification of the tender documents, if received five working days prior to closing date for the submission of bids prescribed by the Company. The Company response (including an explanation of the query) will be sent in writing or by fax/e-mail to all prospective bidders who have purchased the tender documents. Verbal instructions/reference will not be acceptable.

6. **Modification and withdrawal of bid:**

6.1 The bidder may modify or withdraw its bid after the bid submission, provided the written notice of the modification or withdrawal is received by the Company prior to the deadline prescribed for submission of bid. After the bids/quotations are opened, no bidder shall be allowed to revise, propose or request any change in the bid.

6.2 The bidder's modification or withdrawal notice shall be sealed and addressed to GM (P). A withdrawal notice may be sent by fax followed by a signed copy.

6.3 Bids once opened cannot be withdrawn during validity period.

7. **Bid validity:**

All offers shall remain valid up to 90 days (120 days in case of Two Envelope bidding procedure) from the date of opening of bids, until any further extension agreed by the bidder. If the bidder agrees for extending bid validity the bid bond shall also be extended accordingly. A bidder giving extension to his bid validity will not be required or permitted to modify his bid. If there will be any query/clarification or extension request asked by the Company, the bidder should reply the same within 7 days after receipt of the same and if bidder takes more than 7 days the delay in reply will be added to their bid validity period.

8. **Rate Escalation:**

8.1 **All items except line-pipe:**

Quoted prices shall remain valid. firm, irrevocable and fixed till the fulfillment of obligations by the bidder and will not be subject to escalation / change on any account.

8.2 **Line-pipe only:**

8.2.1 Bidders are essentially required to submit detailed breakdown of rates indicating per ton price of:
a) H.R. Coil.
b) All other charges (including wastage, transportation, conversion cost etc).

8.2.2 Rate / price offered by the bidders shall be firm and irrevocable. However bidder offering pipe manufactured from Pakistan Steel Mills (PSM) HR coil are required to submit certified documentary evidence of HR coil rates. Adjustment in line-pipe rates (from the bid opening date till the currency of order) due to change in rate of HR coil manufactured by PSM is admissible to the extent of raw material cost without wastage. The bidders are required to submit certified documentary evidence of HR coil rates published by PSM, at the time of submission of bids. SSGC may verify the document / rates from PSM.

8.2.3 The variation clause however shall not be applicable on line-pipe quantities which were delivered within 20 days of the announcement of the variation (both days inclusive) in price of HR coil by PSM.

e-Pak Acquisition and Disposal System (EPADS) generated document | © 2026

8.2.4 The variation clause also shall not be applicable on the line pipe quantities delivered after the specified delivery schedule (total or monthly consignment wise)

8.2.5 No escalation is applicable on line pipe manufactured from imported HR coil.

9. **Bid bond (earnest money):**

Bid bond equivalent to two percent (2%) of the total offer value, in favor of Sui Southern Gas Company Ltd. shall accompany the bid if bid value is above Rs.500,000 in the form of pay order, demand draft, call deposit receipt or a bank guarantee (specimen of bank guarantee is attached at Annexure-A), issued by a scheduled bank in Pakistan. The bid bond shall remain valid for 120 days (150 days in case of Two Envelope bidding procedure) unless specified otherwise. The bid bond shall be returned/refunded to the un-successful bidders while the bid bond of the successful bidder shall be retained, till submission of Performance bond (if applicable). Bids without bid bond will not be considered. In case the order value is less than Rs: 500,000 the bid bond in lieu of performance bond will be retained till fulfillment of obligations by the supplier. However, in either case the bidder is responsible to arrange the extension the bid bond validity as per requirement. If bid bond submitted by the supplier is more than 2% of ordered value, it may be replaced with appropriate value. If order value is less than Rs. 500,000, the bid bond will be returned along with the order. Bid bonds of non-compliant bidders may be released during evaluation process. The bid bond may be forfeited if a bidder withdraws the bid duringvalidity period specified by the bidder or if successful bidder fails to:

- Accept purchase order,
- Furnish performance guarantee in accordance with clause 16 of Section 1,
- Supply material as per requirement and delivery schedule.

9.1 In the event of bid bond validity following short of the prescribed period of 120 or 150 days as the case may be either (i) due to extension in the bid submission date or (ii) where so required by the procuring agency, then in such an event it shall be mandatory on the padder to extend the bid bond validity upto 120/150days within 30 days of the opening of technical prbposal / bid, and / or where so required by the procuring agency.

9.2 In the event of the bid security amount deposited / furnished by the bidder falls short by 10% of the requisite Bid security amount. The procuring agency keeping in view the nature of the procurement may consider and allow the bidder to deposit / furnish the balance 10% amount, provided the bidder does so within 15 days of the opening of the bid. Notwithstanding that all other terms & conditions have been fully complied with.

10. **Opening of bids:**

Bids will be opened in presence of bidders or their authorized agents at the address provided on "invitation to bids". The bidder's representatives who are present shall sign the bid opening sheet (attendance sheet) to mark their attendance/witness. Commercial contents of bids will be announced/recorded in bid opening sheet.

11. **Preliminary Examination of bids:**

11.1 The Company will examine the bids to determine their completion, compurational errors, provision of guarantees, authorized signature and other related matters.

11.2 Arithmetic errors will be rectified on the following basis. Discrepancy between unit price and the total price obtained by multiplying the unit price and quantity, the unit price shall prevail and the total price will be corrected. Discrepancy between total bid amount and the sum of total prices, the total prices shall prevail and the total bid amount will be corrected.

11.3 Prior to a composed evaluation, the Company will determine the substantial responsiveness of each bid to the bidding documents. In Company's opinion a substantially responsive bid is the one which conforms to all the terms and conditions of the bidding documents without any material deviation.

11.4 Bid determined as not substantially responsive will be rejected by the Company and cannot subsequently be made responsive by the bidder through correction of the non-conformity.

Sui Southern Gas Co. Ltd. Procurement Deptt.

12. **Clarification of submitted bids:**

To assist in the examination, evaluation and comparison of bids, the Company may at its discretion inquire any clarification from bidder about their bid. All responses by bidders shall be provided in writing and no change in the price or substance of the bid shall be sought. offered or permitted.

13. **Technical Literature & Samples.**

The Bidder(s) shall submit the following.

13.1 Samples (if applicable/required)

13.2 Original or legible copy of technical literature/performance characteristics

13.3 Test Certificates (if applicable/required)

13.4 Documentary evidence for legal import in case of imported material. (At the time of delivery when quoted on FOR basis)

13.5 In case of pipeline operation material bidders must also attach a "proof' from supplier/ manufacturer, that goods offered have been used successfully on a high pressure natural gas pipeline elsewhere under tropical climatic conditions.

13.6 **Specification Compliance Sheet:**

Company requires a clause-by-clause commentary on the Specifications, demonstrating the materials responsiveness to those specifications or a statement of deviations and exceptions to the provisions of the specifications, if so required/desired. For purposes of the commentary to be furnished pursuant to above, the bidder shall note that standards for workmanship, material and equipment and references to brand names or catalogue numbers, designated by the Company in the specifications are intended to be descriptive only and not restrictive. The bidder may substitute other authoritative standards, brand names and/or catalogue numbers in its bid provided which demonstrates to the Company's satisfaction that the substitutes are equivalent or superior to those designated in the specifications by the Company.

Bid which does not possess above documents, certificates etc., may be considered technically Non-compliant.

13.7 The offer shall be accompanied with all technical data/documents/certifications as required under the tender specifications. Evaluation shall be carried out on the basis of data/ documents/certifications submitted with the bid. No clarification, additional information may be sought / accepted after bid opening.

13.8 Deviation to technical specifications:

The bidder shall fill the "technical compliance sheet" and mention offered specifications along with reference to its technical brochure/literature (page/clause No.etc). Statement such as "Compliant" or "Confirmed" is not acceptable. Deviation to tender terms and technical specification is not acceptable. However, if bidder feels to mention minor deviation, the same shall be referred categorically on the "Bid Form" as well as on the technical compliance sheet stating reference of its technical data sheet/brochure. In case of insufficient information, data or documents, the Company is not liable to seek clarification and the bid may be determined non-compliant on provided information.

14. **Award/Evaluation Criteria:**

14.1 In case of locally manufactured items e.g. service line material & meter components, manufactured by local vendors, the lowest bidder will be awarded maximum quantity as per his declared capacity and past performance in respect of delivery and quality. New vendors / manufacturers shall also be considered for placement of a purchase order up to a maximum of 10% of the tender quantity if their submitted sample has been tested and approved and provided they have quoted lowest price or agree to accept the order on lowest received price.

14.2 Generally for other items other than above, ordering shall be based on technical compliance and lowest quoted price. Supplies may be subject to pre shipment inspection and post qualification by a third party in case of foreign material. If required during the process of manufacturing and / or inspection, SSGCL representative may visit the manufacturer facility to witness the manufacturing / inspection process.

Sui Southern Gas Co. Ltd. ★ H.O Gulshan-e-Iqbal ★ Procurement Dept.

e-Pak Acquisition and Disposal System (EPADS) generated document | © 2026

14.3 Evaluation may be carried out both on item or on group of items/single or multiple package basis depending upon the nature of requirement exclusively at the discretion of the company to ensure economic procurement.

14.4 Company reserve the right to settle the final terms of supply with the lowest evaluated and commercially responsive bidder. Any effort by the bidder (s) to influence the outcome of bid evaluation or placement of purchase order may result in disqualification of the bidder.

15. Loading of Bids:

Bids may be loaded with following if offer found to be deviated from specifications, delivery schedule, terms & conditions without stating the amount involved in such deviation by following method:

15.1 The cost of compensation / loading amount for that item shall be derived from the bid itself.

15.2 If 15.1 is not possible, average of rates of other bidders, who have quoted for that item conforming to technical specification, shall form the basis for cost compensation/loading.

15.3 The company will encourage participation by local bidders who will be given price preference. Landed cost factor shall be determined as per prevailing Government policy / SRO. However they will submit details of local value addition on raw material imported by them and percentage of locally manufactured component with documentary evidence.

16. Performance Bond:

16.1 In case purchase order value is above Rs:500,000, the successful bidders shall submit performance bond guarantee which is to be submitted within ten days from receipt of LOI or order along with integrity pact. The successful bidders shall submit a performance bank guarantee (PBG) in the form of a pay order or bank guarantee (specimen attached at Annexure-B) issued by a scheduled bank in Pakistan, for an amount equivalent to 10% of the total value of the purchase order or as specified, in the "letter of intent". The performance bond unless specified otherwise; shall remain valid till;

16.1.1 Completion of final satisfactory delivery in case of consumable items.

16.1.2 12-18 months from the date of satisfactory delivery of the equipment/machinery.

16.1.3 Satisfactory delivery/installation of system in case the installation responsibility is on supplier's part.

16.1.4 120 days in case of chemicals.

16.1.5 In case of locally manufacturing item, the PBG equivalent to 3 months delivery schedule will be required after placement of purchase order which should remain valid till completion of final satisfactory delivery of the ordered quantity.

16.1.6 In case of small diameter line pipe (MS/MDPE) the PBG shall remain valid up to 3 months after completion of satisfactory final delivery.

16.1.7 In case of Vehicles, Manufacturer's Warranty is required in lieu of PBG.

16.2 The guarantee will be released after completion of this period, subject to satisfactory performance of the supplied equipment/machinery/system as mentioned at 16.1 above. The supplier shall keep the guarantee valid at their cost until fulfillment of the obligations.

16.3 In case the bidder does not submit the performance bond as specified, the delivery time of goods shall be deemed to have commenced 10 days (15 days in case of import) from the issuance of letter of intent/purchase order. The proceeds of the performance bond shall be payable to the Company as compensation for any loss resulting from the supplier's failure to complete its work under the purchase order/ contract. The validity period of the performance bond is to be extended if the delivery date/period is being extended mutually by the Company/Supplier.

14.

16.4 The performance bond will be discharged / returned by the Company not later than thirty (30) days following the date of completion of the supplier's work under the purchase order/contract including any warranty/guarantee/performance obligations as specified in the special conditions of contract. The supplier shall not be absolved of their liability to perform in case of encashment of performance bond by the Company, who shall have the right to claim and receive all damages/losses incurred due to non-performance.

16.5 The Company shall promptly notify the supplier in writing for any claim arising under this guarantee. Upon receipt of such notice, the supplier shall promptly repair or replace the defective goods or parts thereof, without cost to the Company other than, where applicable the cost of inland delivery of the repaired or replaced goods or parts from the port of entry to the final destination.

Sui Southern Gas Co. Ltd. Procurement Dept.

e-Pak Acquisition and Disposal System (EPADS) generated document | © 2026

16.6 If the supplier, having been notified, fails to rectify the defect (s) in accordance with the purchase order/contract, the Company may proceed to take such remedial actions as may be necessary at the supplier's expense. Any amount payable by the supplier under this clause may be recovered by the Company, by withdrawing from the performance bond without having to notify or seek the approval of the supplier.

16.7 Nothing herein contained shall be construed to limit supplier's obligation of performance of the order/contract to the value of the performance bond.

16.8 **Guarantee/Warranty:** In case where performance guarantee is not applicable, the supplier shall confirm that all suppliedgoods under the contract/purchase order are new, unused, of the most recent or current modelsand incorporate all recent improvements in design and goods unless provided otherwise in the contract/purchase order. This guarantee shall remain valid for a period of twelve to eighteen months after the goods have been delivered or commissioned.

17. **Purchase Order/Contract:**
Purchase order of quoted material may be placed on fulfillment of conditions mentioned at 14 &16 above which is through formal confirmation for proceedings with the suppliers.

18. **Assurance:**
The successful bidder will be required to give satisfactory assurance of its ability and intention to deliver the goods, pursuant to the tender enquiry and contract within the time set forth therein.

19. **Force Majeure:**

19.1 In the event of either party hereto being rendered unable, wholly or partially, by force majeure circumstances to carry out its obligations under the purchase order/contract documents, such party shall give notice and full particulars and other satisfactory evidence of such force majeure circumstance(s) in writing or by fax to the other party within 7 days after theoccurrence of the cause(s). Relied upon the obligations of the party giving such notice so far as they are affected by such force majeure shall be suspended for the period during cause(s) shall, as far as possible, be remedied and obviated with all reasonable dispatch. The term 'force majeure' as employed herein, shall mean acts of God or public enemy, civil insurrection, fires, floods, earthquakes or other physical disasters, order or request of governments, blockade or embargo. It is, however, clarified that strikes, lockouts, shortage or non-availability of raw materials, rains, and disturbances, other labor dispute or congestion's in ports on the supplier's side shall not be included in the term 'force majeure'.

19.2 In case the force majeure contingencies last continuously for more than one month, both parties will agree on the necessary arrangements for the further implementation of the purchase order/contract. In case further implementation is unforeseeable and impossible, both parties shall arrange for the termination of the purchase order/contract, but without prejudice to their rights and obligations prior to such termination it being understood that each party shall fulfill its contractual obligations so far as they have fallen due before the operation of force majeure.

20. **Amendment in purchase order/contract:**

20.1 The Company may at any time by a written notice to the supplier make changes within the general scope of the purchase order/contract in any one or more of the following:-

20.1.1 Drawings, designs or specifications where goods to be furnished under the purchase order/contract are to be specifically manufactured for the Company.

20.1.2 The method of shipment or packing.

20.1.3 The place of delivery.

20.1.4 Quantities of item up to a maximum variance of +15% of purchase order/contract value.

20.2 Company reserves the right to increase/decrease the quantities or delete any or all items listed in the price schedule/schedule of requirement/bid form without assigning any reason.

20.3 Upon notification by the Company of such modifications the supplier shall submit to the Company an estimated cost for the proposed modification within ten (10) calendar days of receipt of notice of the modification and shall include an estimate of the impact (if any) of the modification on the delivery dates under the purchase order/contract, as well as a detailed schedule for the execution of the modification, if applicable.

Sui Southern Gas Co. Ltd. Procurement Dept. H O Gulshan-e-Iqbal

e-Pak Acquisition and Disposal System (EPADS) generated document | © 2026

20.4 The supplier shall not perform modification in accordance with clause 20.1 above until the Company have authorized a modification order in writing on the basis of the estimate proyided by the supplier as described in clause 20.3.

20.5 Modification mutually agreed upon shall constitute a part of the work under the purchase order/contract and the provisions and conditions of the contract shall apply to the said modification.

20.6 If modification made by the Company results in a variation in purchase order/contract quantities whose net cost effect is within 15% of the total value then the original purchase order/contract rates would be applicable. Any "modification" affecting the quantities and the corresponding cost effect beyond 15 percent would be mutually agreed upon between the Company and the supplier.

21. Extension in delivery period:

21.1 Delivery of the goods shall be made by the supplier in accordance with the schedule of requirement and delivery period; however, the supplier may claim extension of the time limits as set forth in the schedule of requirements and delivery period in case of

21.1.1 Modification in the goods ordered by the Company pursuant to clause 20.

21.1.2 Delay in provision of any services which are to be provided by the Company (services provided by the Company shall be interpreted to include all approvals by the Company under the contract).

21.1.3 Delay in performance of work caused by orders issued by the Company.

21.2 The supplier shall demonstrate to the Company's satisfaction that it has used its best endeavors to avoid or overcome such causes for delay and the parties will mutually agree upon remedies to mitigate or overcome such causes for delay.

21.3 Not withstanding clause 21.1 above, the supplier shall not be entitled to an extension of time for completion unless the supplier at the time of such circumstances arising, immediately has notified the Company in writing of any delay that it may claim as caused by circumstances pursuant to clause 21.1 above and upon request of the Company, the supplier shall substantiate that the delay occurred is due to the circumstances referred by the supplier.

22. Packing:

22.1 The material shall be in original/sealed packing to ensure delivery without any damage during transit.

22.2 If any of the good is discovered to be damaged or unacceptable at the point of embarkation, the supplier shall be responsible for replacement of those goods free of any charge and cost to the Company, within the delivery time schedule of the contract/purchase order.

22.3 The identification marks showing contents, quantity and contract/purchase order number shall be printed on each skid/metal container/case containing one copy of invoice & packing list.

22.4 Handling and Transportation:
The Supplier shall arrange for the proper stacking of the Goods and for its proper storage and lashing and for other such provisions/suitable measures as may be necessary to safeguard against movement and damage to the Goods from the point of loading to its designated destination.

23. Inspection:

23.1 Pre-delivery inspection may be carried-out at the premises of supplier(s) and/or post delivery inspection at company's any location, by the appointed inspector/inspection team, third party inspectors appointed by the Company.

23.2 The Company reserves the right to arrange inspections and tests to the goods or manufacturing processes at any stage at any of the premises of the supplier or its subcontractor(s) or and at the point of delivery and at the goods final destination. Where conducted on the premises of the supplier or its sub-contractor(s), all reasonable facilities and assistance including access to drawings and production data shall be furnished to the inspector at no charge to the Company. Such inspection, however, shall not relieve the Supplier to fulfill the obligations under the

Sui Southern Gas Co. Procurement

purchase order/contract. If goods fail to conform to the specifications, the Company may reject them.

24. **Delivery:**

24.1 Free delivery at any of the following locations, unless specified otherwise:

24.1.1 R & D Section, Stores Department Abul Hasan Isphani Road Karachi
24.1.2 R & D Section, Stores Department F-37, SITE Karachi.
24.1.3 R & D Section, Stores Department F-76, Dope Yard SITE, Karachi.
24.1.4 Meter Manufacturing Plant, Sir Shah Suleman Road, Gulshan-e-Iqbal Karachi.
24.1.5 Khadeji Store, 57th Kilometer at Super High way Karachi.
24.1.6 Any other location specified by the company.

24.2 Delivery period shall commence after 10 days (15 days in case of import) of the issuance of letter of intent or from the date of purchase order/contract whichever is earlier, unless otherwise specified.

24.3 The supplier shall replace defective material at their risk & cost including transportation, duty, taxes etc.

24.4 GST Invoice if applicable be submitted at R&D section Stores Department along with material & delivery challan.

24.5 Unloading and stacking through cranes, fork lifters, labor etc. will be arranged by supplier at delivery site (for material like Pipes/Heavy Machinery & Equipment etc).

24.6 Delivery is to be made strictly in accordance with "delivery schedule" as specified by the Company.

24.7 The rejected material is to be collected/lifted by the supplier within a maximum period of one month after its intimation by the Company. Beyond specified period, the Company shall not be responsible for storage/safety of the uncollected material.

25. **Delivery Failure:**

25.1 In case the supplier fails to supply/ship the material within the stipulated period, the Company have the right to make an alternative arrangement for the purchase of the goods on such terms as may be offered. In such event all losses, cost and charges sustained/incurred by the Company on stated purchase shall be recovered from the Supplier without prejudice to any other right or remedy available to the Company which includes recovery of losses sustained by the Company from any due payment of the said supplier.

25.2 In the event Company remains unable to make such alternative arrangements, the Company has the right to recover from the supplier any or all losses sustained as a result of the supplier's failure to ship/supply the goods as per schedule of delivery.

25.3 In the event Company being forced to purchase any quantity or any other alternative not specified in this document as a result of any failure to supply/ship the material, the Company shall have the right to terminate the contract/purchase order without prejudice to any other rights or remedies available to the Company.

26. **Payment:**

26.1 The supplier after delivery of goods and its acceptance shall submit invoice to Finance Department of the Company, containing following information i.e.

(a) Purchase order No. & date
(b) Items
(c) Quantity
(d) Price
(e) Invoice value
(f) Point of delivery
(g) Delivery challan indicating delivery date, etc.

Payment will be made within 30 days of completion of stated formalities.

26.2 Income Tax @ 3.5% or as applicable under the prevailing government rules will be deducted at source (except where the supplier provides an income tax exemption certificate). Quoted price shall be inclusive of all taxes, except GST, which shall be mentioned separately. Supplier(s) are required to submit signed and stamp acknowledgement slip, Sales Tax return, Annex "C" & Annex "I" (whichever applicable) in which Sales Tax(of relevant Sales Tax invoice) is paid.

Sui Southern Gas Co. Ltd. Procurement Dept.

e-Pak Acquisition and Disposal System (EPADS) generated document | © 2026

26.3 In case supplier is not liable to pay tax under the income tax ordinance or is liable to pay tax at a lower rate the supplier shall obtain a certificate from the tax authorities in Pakistan to that effect. In case the required certificate is not produced by the supplier prior to the date of payment, then the Company shall deduct tax at source from the gross payment payable to supplier.

27. Liquidated damages:

27.1 If supplier fails to deliver ordered material within the stipulated period/scheduled time specified in purchase order, Company, without prejudice to any other remedies, shall deduct from the bill or any other due payments/guarantees, as liquidated damages, a sum equivalent to 0.1% per day of the undelivered goods up to maximum 10%. The liquidated damages shall also be applicable for the cancelled quantity of goods under clause 28.

27.2 Whenever liquidated damages become payable, in the event that delivery of all goods and equipment is not made within the time period specified except on account of force majeure, the Company shall quantify the same and shall serve notice to the supplier requiring payment thereof. If the supplier fails to remit payment within 15 days of receipt of such notice, the Company shall forth-with become entitled to recover the same without recourse to the supplier, by calling upon The Performance Bond, withdrawals by way of liquidated damages shall not reduce the value of the Performance bond.

27.3 The payment of liquidated damages shall not relieve the supplier from performing and fulfilling all its obligations under the contract/purchase order nor shall the right and entitlements of the Company be affected or reduced in any manner.

27.4 In case of order placed on FOB/C&F basis, the delivery period shall commence from the date of confirmation of L/C. However, delayed submission of PBG period in excess of time limit will be deducted from the delivery period for the purpose of recovery of late delivery charges.

27.5 The liquidated damages shall be the sum equivalent to point one (0.1%) percent of the Contract price of the delayed goods as unperformed services for each day of delay, until actual delivery or performance, up to a maximum deduction of ten (10) percent of the Contract price. Once this maximum is reached, the Company may consider termination of the Contract at the risk and cost of the Supplier.

28. Default by Supplier:

28.1 The Company may, without prejudice to any other remedy by written "notice of default" sent to the supplier, cancel the purchase order whole or in part; if:

28.1.1 The supplier fails to deliver any or all of the ordered quantity as per specified delivery schedule or any extension thereof granted by the Company

28.1.2 The supplier fails to perform any other obligation(s) under the "purchase order".

28.1.3 The Company during the delivery period has reasons to believe that the supplier will not be able to fulfill the obligations under the purchase order/contract.

The Company prior to exercising its right to cancel the purchase order/contract shall issue notice to the Supplier specifying the default(s) and the supplier shall submit an explanation within seven (07) days of receipt of such notice. If such explanation is not furnished within the stipulated time or if so furnished, is found to be unsatisfactory and/or the default(s) continues, purchase order/contract may be cancelled. The Company in addition to cancellation of purchase order/contract may suspend/cancel the enlistment of supplier.

28.2 The Company shall have the right to terminate/cancel the contract/purchase order concluded between the supplier and Company; if:

28.2.1 The successful bidder fails to furnish the performance bond as under clause 16 thereof.

28.2.2 The supplier fails otherwise to perform, fulfill or comply with terms, conditions, regulations and requirements of the contract/purchase order to carry out the work in accordance with the provisions thereof or abandons the shipment

28.2.3 The supplier becomes bankrupt or insolvent or makes an assignment for the benefit of its creditors.

28.2.4 One or more consignments of material delayed by a period of more than three months or non-supplied.

28.2.5 Rejection of manufacturing items as a result of observation by inspection team.

Sui Southern Gas Co. Procurement

28.2.6 Penalty on higher rejection rate of supplied goods.

28.3 The supplier shall have the right to terminate the contract/purchase order if:-

28.3.1 The Company fails to establish the "letter of credit" within the stipulated period as required.

28.3.2 The Company becomes bankrupt or insolvent or makes an assignment for the benefit of its creditors.

28.3.3 The Company is in default and breach of its obligation and liabilities under the contract/purchase order.

29. **Resolution of dispute:**

The Company and the supplier shall make every effort to resolve the disagreement or dispute arising between them amicably by direct discussion under or in connection with the purchase order/contract.

30. **Applicable law:**

The purchase order/contract shall be governed by and interpreted in accordance with the laws of the Islamic Republic of Pakistan.

31. **Declaration/Integrity Pact/Certification:**

31.1 Successful supplier shall furnish the declaration (specimen attached at Annexure-C) within 10 days after issuance of LOI/order /contract if the order/contract value becomes Rs:10 million or above.

31.2 In case of F.O.B/C&F Purchase order/Contract, the Principal as well as "local agent" both will sign the "integrity pact" as required under this clause.

31.3 Bidders to submit a certificate on Rs:100/- non-judicial stamp paper certifying that they are not black listed by the Government/Autonomous bodies and declared as defaulted supplier.

32. **Arbitration/resolution of disputes:**

32.1 Any difference or dispute arising out of or in connection with the contract between the Company and the supplier which can not be amicably resolved shall be referred to arbitration in Karachi, Pakistan, to two arbitrators, one appointed by each party of such difference/ dispute. In case the judgment of the said Arbitrator being at variance, the matter shall be referred to an "umpire", who shall be appointed by both the side Arbitrators. The umpire shall be retired judge of a High Court or the Supreme Court of Pakistan. Such arbitrators and umpire shall together proceed to adjudicate he disputes in accordance with the Arbitration Act, 1940, as amended from time to time.

32.2 Prior to exercising any right by the Company or supplier to terminate the purchase order/ contract under the conditions stipulated above, a return notice shall be required to be given to the other party specifying such default(s) and calling for submission of an explanation within seven (7) days of receipt of such notice. If such explanation is not furnished within the stipulated time or if so furnished, is found to be unsatisfactory, and the default(s) continuous, the purchase order/contract be terminated with notice to other party.

32.3 The agreement shall be governed by Law of Islamic Republic of Pakistan and the arbitration language shall be English.

32.4 During the course of arbitration, the supplier shall not suspend the performance of his esponsibilities and obligations under the contract unless authorized by the Company in writing to do so.

32.5 In addition to the remedies as stated above, there is a "grievance committee" formed by the Company which can be approached by supplier in case of non-settlement of issues at any stage if supplier feels that settlement is not insight or not justified.

33. **Redressal of grievances by the procuring agency.-**

33.1 Grievance Committee is in place to address the complaints of bidders that may occur prior to entry into the procurement contract.

33.2 Aggrieved bidder may lodge a written complaint concerning his grievances not later than fifteen days after the announcement of the bid evaluation report.

33.3 Bidder is to submit complaint on letter head duly signed by the authorized person. Tender reference, details / nature of complaint, complainant active telephone, cell, postal address, email

Sui Southern Gas Co. Ltd. Procurement Dept.

e-Pak Acquisition and Disposal System (EPADS) generated document | © 2026

address must necessarily be provided. Incomplete / anonymous complaints will not be responded at all.

33.4 The Committee shall investigate and decide upon the complaint within fifteen days of the receipt of the complaint

33.5 Mere fact of lodging of a complaint shall not warrant suspension of the procurement process.

34. Blacklisting of Suppliers and Contractors:

The Company shall permanently blacklist or temporarily debar (at least for 6-months from participating in SSGC's tender proceedings) if, a supplier or contractor who either constantly fails to perform satisfactorily performance or found to be indulged in corrupt and fraudulent practices as defined below:

34.1 Corrupt and fraudulent practices" includes the offering, giving, receiving, or soliciting of anything of value to influence the action of an official/Company.

34.2 If the supplier/contractor found responsible for the detriment of the Company during proceedings of procurement/contract, prior to its execution.

34.3 Misrepresentation of facts in order to influence the procurement process or the execution of the purchase order/contract.

34.4 Collusive practices among bidders (prior to or after bid submission) designed to establish bid prices at artificial, non- competitive levels and to deprive the Company of the benefits of free and open competition.

35. Supplier's Guarantee and Responsibilities:

The Bidder/Supplier shall guarantee that the materials supplied against this tender enquiry is new and is of acceptable quality and has been tried and approved on similar jobs. The validity and scope of such guarantee will be in accordance with conditions stated in this document. In case the opinion of the Company the Goods fail to perform the services in accordance with the specifications specified in Section IV due to manufacturing defects/defective material and/or workmanship, the Supplier shall replace, repair or reconstruct such Goods at his own cost in Pakistan wherever the Goods shall be located so that such Goods shall be restored to such conditions that it shall perform in satisfactory operating condition or to replace it with new Goods at Supplier's cost so that the goods shall perform in accordance with the specifications and details as set forth in the Contract/tender documents. If the Supplier shall fail to do so after expiry of 15 days notice to this effect served on him by the Company, the Company shall be at liberty to repair, replace and/or reconstruct the Goods at its costs provided in the event, the Company shall be entitled to recover total cost of such replacement form the Supplier withdrawing from the Performance Guarantee.

36. Language:

The bid prepared by the bidder and all correspondence and documents relating to the bid exchanged by the bidder and the Company shall be written in English language. Any printed literature furnished by the bidder may be written in another language provided that this literature is accompanied by an English translation in which case for purpose of interpretation of the bid, English translation shall govern.

37. Vehicle Applied by Authorized dealer of local manufacturer :

Incase of vehicle supplied ly authorized dealer of local manufacturer, the authorized dealer will be responsible to get the vehicle (s) registered through Excise Department Government of Sindh and provide Original Registration book / Original Registration Invoice / Tax payment receipt / other related documents & provide the vehicle (s) number plate (s) to SSGC. Registration fee will be reimbursed by SSGC subject to submission of Government of Sindh Excise Department receipt.

Procurement Dept.

Section - 1A

Additional Terms for Tenders on F.O.B/C&F basis:

1. **Submission of bids:**
   - 1.1 Bid bond (Earnest money) @ 2% of the total F.O.B value as per clause 9, of section 1 of "General terms & conditions" is required to be submitted with the bid. It may be noted that bids without bid bond will be rejected and returned to bidder.
   - 1.2 In case the bidder is manufacturer the bid shall either be completely prepared by the foreign bidder including signing and stamping of all documents. In case, such documents are being signed by the local agent of the bidder, the bid shall essentially include supplier's original Performa invoice and an original authority letter in favor of local agent to sign the documents on their behalf. The bid is liable for rejection if these conditions are not met.
   - 1.3 In case of Bidder offering to supply goods which the bidder did not manufacture or otherwise produce, the bidder shall be duly authorized by the goods manufacturer or the producer to submit bid or supply the goods on their behalf
   - 1.4 Bids shall be submitted (preferably through local agents) in two copies, (original + copy).
   - 1.5 The price on unit FOB and C&F basis is to be quoted separately. Following are to be essentially indicated in the bid form:
     - 1.5.1 Country of origin.
     - 1.5.2 Port of shipment.
     - 1.5.3 Estimated gross/net weight, dimension & volume of offered item and estimated weight of each item.
     - 1.5.4 Delivery period or schedule in case of bulk quantities.
     - 1.5.5 Original technical literature.
     - 1.5.6 Beneficiary's complete address.
   - 1.6 Foreign bank charges and L/C confirmation charges will be borne by the supplier.
   - 1.7 **Bid Currency:**
     The rates shall be quoted in bidder's home country or in United States Dollars. A bidder expecting to incur a portion of its expenditures in the performance of the contract in more than one currency and wishing to be paid accordingly shall indicate the same in their bid. However, bidder from Pakistan would be paid in Pak Rupee.
     (Clause 1.5 of General Terms & Conditions is not applicable)

2. **Bid bond:**
   - 2.1 Bid bond shall be equivalent to two percent (2%) of the total F.O.B value, in favor of Sui Southern Gas Company Limited and shall be in the form of pay order, demand draft, call deposit receipt or a bank guarantee (specimen attached at Annexure-A), issued by a scheduled bank in Pakistan. The bid bond shall remain valid for 120 days (150 days in case of Single Stage Two Envelope bidding procedure) unless specified otherwise. The bid bond shall be returned/refunded to the un-successful bidders while the bid bond of the successful bidder shall be retained, till submission of Performance bond. Bids without bid bond will not be considered. In case the order value is less than US$:25,000 the bid bond in lieu of performance bond, will be retained till fulfillment of obligations by the supplier. However, in either case the bidder is responsible to arrange the extension of bid bond validity as per requirement. If bid bond submitted by the supplier is more than 2% of ordered value, it may be replaced with appropriate value. Bid bonds of non-compliant bidders may be released during evaluation process. The bid bond shall be denominated in the currency of the bid or any other freely convertible currency.
   - 2.2 Bid submitted on behalf of different principals shall be required to submit separate bid bond along with the bid for each offer.
     (Note as mentioned at Clause 9, 9.1 & 9.2 of General Terms & Conditions shall also apply).

3. **Conversion to single currency:**
   In order to carry out evaluation and comparison, the Company will convert all bid prices expressed in various currencies to Pak Rupees at the buying exchange rates established by the State Bank of Pakistan or any other commercial bank in Pakistan for similar transactions on the date of opening of bids. In case of Two Envelope Bidding System, the exchange rates prevailing at the time of opening of Technical Proposals will be used for conversion and evaluation.

Sui Southern Gas Co. Ltd. Procurement Dept.

4. **Evalnation Criteria:**

4.1 The evaluation of bids will be carried out on C&F / landed cost basis, however purchase order will be placed on FOB price on freight to collect basis. The bidders are required to submit best freight charges obtained by them from Pakistan National Shipping Corporation (PNSC) in order to have a uniform basis to arrive at C&F cost. Bill of lading to indicate "freight payable by the consignee at destination" in local currency. Foreign currency exchange rate (selling) will be considered as of bid "opening date".

4.2 In the case of goods to be offered from outside Pakistan, custom duties and other similar import taxes which are applicable shall be added to the bid.

4.3 In case shipment by air it shall be arranged through Company's airfreight forwarder (s) or their nominated agent. "on freight to collect basis ".

(Clause No. 14.3 to 14.4 of General Terms & Conditions are also to be applicable).

5. **Loading of Bids:**

Freight charges from port of loading up to Karachi port or unit C&F value must be indicated in bid form, failing, which bid will be loaded by 5 to 10% freight charges. Bid will be declared non-compliant if loading results an extensive increase in price of material.
(Clause 15 of General Terms & Conditions is also applicable).

6. **Performance bond:**

6.1 In case purchase order value is US$:25,000/- or above or equivalent for other currencies, letter of intent will be issued to successful bidders for submission of performance bond guarantee which is to be submitted within 15 days from receipt of L.O.I. The successful bidders shall submit a performance bank guarantee (P.B.G) in the form of bank guarantee (specimen attached at Annexure-B) issued by a scheduled bank in Pakistan, for an amount equivalent to 10% of the total value of the purchase order or as specified, in the letter of intent .The performance bond unless specified otherwise, shall remain valid till:

6.1.1 Completion of final satisfactory delivery in case of consumable items.
6.1.2 12-18 months from the date of satisfactory delivery of the equipment/machinery.
6.1.3 Satisfactory delivery/installation of system in case the installation liabilities will be on supplier's part.
6.1.4 120 days in case of chemicals.

6.2 The Letter of Credit shall be operative upon receipt of Performance Bond (as specified in para6.1) and integrity pact, any delay due to late submission of Performance Bond will be on supplier's account. Late submission of PBG should not affect the delivery schedule.

6.3 The performance bond shall be denominated in foreign currency or in currency of the contract/purchase order or in a freely convertible currency acceptable to the Company and shall be in the form of a bank guarantee.

6.4 In very special case subject to approval of the management, the P.B.G could be acceptable in Pak Rupee. However, an undertaking should be given by the supplier that in case of encashment of P.B.G. supplier shall deposit short fall amount due to Pak Rupee exchange rate.

6.5 **Warranty/Guarantee:**
In case where performance guarantee is not applicable, the supplier shall warrant that all goods supplied under the contract/purchase order are new, unused, of the most recent or current models and all recent improvements in design and goods have been incorporated, unless provided otherwise in the contract/purchase order. This guarantee shall remain valid for a period of twelve to eighteen months after the goods have been delivered or commissioned.
(Clause 16.2 to 16.8 of General Terms & Conditions are also applicable).

7. **Delivery:**

7.1 In case of "FOB" order/contract, shipment(s) shall be effected per vessel of Pakistan National Shipping Corporation (PNSC) owned or chartered vessels on "freight to collect" basis. Bill of lading to indicate "freight payable by the consignee at destination". In case goods ready for shipment and the PNSC vessel is

Sui Southern Gas Co. Procurement Dept.

not available at port of loading, supplier shall intimate the same to Company immediately so that matter could be taken with PNSC in Pakistan.

7.2 In case of C&F order/contract, the supplier hereby guarantees/ensure:

7.2.1 To use clean and dry vessel suitable for marine transportation and shall not use tramp vessels.

7.2.2 The goods/material will be shipped/dispatched with all care and diligence at their risk & cost and goods to be stored below deck. Accordingly, the supplier shall be responsible for all damages/losses during inland and marine transportation from the supplier's plant until arrival at Karachi port.

7.2.3 To provide as part of its work all services and functions related to handling, loading, unloading, lashing and securing in ship's holds and all costs, charges and expenses of which shall be included in the purchase order/contract price, unless otherwise specified:

7.3 In case of FOB order/contract, the supplier's obligations shall be over after the goods have crossed the ship's rails. The co-ordination, scheduling and lining-up for a PNSC vessel shall be the obligation of the supplier.

7.4 The supplier shall reimburse the Company all additional duties, taxes and other such charges paid by the Company on account of short shipment by the supplier for all items subsequently shipped on a no-charge basis or otherwise by the supplier. The supplier shall also reimburse the Company all additional duties, taxes and other such charges paid by the Company on account of incorrect invoicing by the supplier.

7.5 Shipment shall be deemed to have been made when the supplier has shipped the goods against a clean bill of lading and all other such documentation, as specified in clause 9.3 & 9.4 appearing next in sequence) have been furnished to the Company.

7.6 The supplier shall ensure that all above mentioned acts and other incidental and ancillary functions are conducted in accordance with sound and acceptable engineering practices. The Company shall be entitled to oppose any incorrect or inadequate practice adopted by supplier in this respect and the supplier shall take corrective action/measure forthwith to correct such omissions. If any goods are discovered to be damaged or unacceptable at the point of loading, the supplier shall be responsible for replacement free of all charges and costs to the Company within the delivery period specified in the purchase order/contract.

8. **Insurance:**

8.1 All goods supplied under the purchase order/contract shall be fully insured in a freely convertible currency against loss or damage incidental to manufacture or acquisition, transportation, storage and delivery in the manner specified in delivery clause 7.

8.2 Marine Insurance shall be the responsibility of the Company unless otherwise specified.

8.3 The supplier shall advise the Company by fax at least seven (7) days prior to the expected date of shipment, the following particulars:-

8.3.1 Name of the vessel and of the shipping company.

8.3.2 Age of the vessel (which should be less than 20 years).

8.3.3 Lloyds 100A1 or equivalent classification of the vessel.

8.3.4 ETD from Port of dispatch and ETA at Karachi

8.3.5 FOB/C&F value of the consignment.

The above information shall also be transmitted to the Company's underwriters, M/s. National Insurance Corporation by fax No. 0092-21-9202779 and to the Company referring Policy No. NIF/M/K/OP/002/73.

9. **Payment:**

9.1 Payment of FOB/C&F prices shall be made in the currency of bid through an irrevocable letter of credit (L/C) established in favor of the supplier, negotiable through the bank of their choice. Bidder shall indicate full name and address of the negotiating bank and the place at which they wish to negotiate the letter of credit. All bank charges outside Pakistan will be on supplier's account and all bank charges within Pakistan will be at Company's account. If confirmed letter of credit is required then charges for confirmation will be on supplier's account.

9.2 The supplier's request (s) for payment shall be made to the Company in writing as follows:

9.2.1 It shall be accompanied by an invoice describing, as appropriate, the goods delivered and the services incurred and by shipping documents submitted pursuant to Clause 9.4 hereof and upon fulfillment of other obligations stipulated in purchase order/contract.

9.2.2 Against shipping documents on arrival of ordered material at consignee destination. Bidder (s) will have to clearly mention, if they wish to opt for this mode of payment

9.3 The letter of credit shall be available upon presenting the following documents to the negotiating bank within 15 days of the date of the bill of lading covering shipment of each consignment

Sui Southern Gas Co. Ltd. Procurement Dept.

e-Pak Acquisition and Disposal System (EPADS) generated document | © 2026

9.3.1-	Invoice	----	4 copies
9.3.2-	Packing list	----	4 copies
9.3.3-	Bill of lading " freight to be paid by consignee at destination" evidencing shipment in terms of the purchase order to Karachi-Pakistan made out to order in the name of Co.'s bank, Notify party Sui Southern Gas Company Ltd.,	----	3 originals & 6 non-negotiable copies.
9.3.4-	Certificate of Origin (Verified/ Endorsed by Chamber of Commerce)	---	2 copies
9.3.5-	Manufacturers test certificate/	----	2copies Inspection report.

9.4 Without prejudice to the supplier's responsibility for providing documents mentioned as at 9.3.1 to 9.3.5 above to bank, the supplier shall forward the following non-negotiable documents directly to Company immediately after shipment so as to reach the Company at least 15 days prior to the arrival of the vessel at Karachi port.

9.4.1	-Invoice	----	6 copies
9.4.2	-Bill of Lading	----	6 copies
9.4.3	-Packing List	----	6 copies
9.4.4	-Certificate of Origin (Verified /Endorsed by Chamber of Commerce)	----	2 copies
9.4.5	-Manufacturers Test Certificate/	----	2 copies Inspection Report.

9.4.6 The invoice to be exactly as per order/contract. Any deviation which render or cause the company to pay demurrage or any other charges with respect to clearance/handling etc. will be borne by the supplier.

9.5 No payment hereunder shall be deemed to be accepted by the Company of the goods covered by such payment nor release the supplier from responsibility thereof under the terms of the purchase order/contract.

9.6 If the Company is compelled to pay demurrage or storage charges or incurs any loss or suffers any damage at Karachi Port on account of non-compliance by the supplier of above requirements, the Company shall be entitled at their sole discretion to recover the same amount from supplier.

10. Termination of purchases order by supplier:

10.1 The supplier shall have the right to terminate the contract/purchase order if:-

10.1.1 The Company fails to establish the letter of credit within the stipulated period as required under clause 9.1 hereof after the supplier has made compliance with the provisions of clause 6.

10.1.2 The Company becomes bankrupt or insolvent or makes an assignment for the benefit of its creditors.

10.1.3 The Company is in default and breach of its obligation and liabilities under the contract/purchase order.

11 Installation/Commissioning/Training:

If installation/commissioning and training is required, the charges will be paid in Pak Rupee and will be subject to deduction of all local duty and taxes (as applicable).

12 Vehicle (s) supplied by foreign manufacturer / principal:

12.1 In case of supply of any type of vehicle (s) / earth moving vehicle (s) by the foreign principal / manufacturer. After clearance of vehicle from the custom, the local agent of the foreign supplier / manufacturer / principal will be completely responsible to get the vehicle (s) registered through Excise Department Government of Sindh and provide Original Registration book / Original Registration Invoice / Tax payment receipt / other related documents & provide the vehicle (s) number plate (s) to SSGC. Registration fee will be reimbursed by SSGC subject to submission of Government of Sindh Excise Department receipt.

12.2 The bidder / supplier shall quote only those vehicle (s) / which fully comply to Pakistani environment and can operate in Pakistan. The bidder should ensure that vehicle (s) consumable i.e (fuel/oil & lubricant/ spares) are easily available in Pakistan.

Sui Southern Gas Co. Ltd. Procurement Dept.

SSGC

Annexure - A

On Non Judicial Stamp Paper of Rs. 50/- (Fifty) Per 100,000
Format of Bid Bond Guarantee

BANK GUARANTEE NO.....
DATE OF ISSUE.....
DATE OF EXPIRY.....
AMOUNT.....

Sui Southern gas Company Limited,
ST. 4/B, Block-14,
Gulshan-e-Iqbal,
Sir Shah Suleman Road,
Karachi.

SSGC/LP/.....

Dear Sirs,

Bid Bond Bank Guarantee

In consideration of M/s.....hereinafter called the Bidder having submitted the accompanying bid & in consideration of value received from Bidder we hereby agree and undertake as follows:

1. To make unconditional payment of Rs..... upon your written demand without further recourse, question or reference to the Bidder or any other person in the event of withdrawal of the aforesaid bid by the Bidder before the end of the period specified in the bid after the opening of the same for the validity thereof or if no such period to be specified within 90 days (150 days in case of Single Stage Two Envelope bidding procedure) after said opening and or in the event that the Bidder shall within the period specified therefore or if no period specified within 15days after the prescribed forms are presented to the Bidder for signature the Bidder shall fail to execute such further contractual documents if any, as may be required by the terms of the bid as accepted or on the Bidder failure to give the requisite Performance Bond as may be required for the fulfillment of resulting contract.

2. To accept written intimation (s) from you as conclusive and sufficient evidence of the existence of a default of non-compliance as aforesaid on the part of Bidder and to make payment accordingly within 03 days of the receipt of the written intimation.

3. No grant of time or other indulgence to, or composition or arrangement with the Bidder in respect of the aforesaid Bid with or without notice to us shall in any manner, discharge or otherwise, however, effect this Guarantee and our liabilities & commitments hereunder.

4. This Guarantee shall be binding on us and our successors in interest and shall be irrevocable.

Yours faithfully,

(stamp and signature of the issuing bank)

Sui Southern Gas Co. Ltd. Procurement Dept. H.O Gulshan-e-Iqbal

SSGC

Annexure- B

On Non Judicial Stamp Papes of Rs. 50/- (Fifty) Per 100,000
Format of Performance Bond Guarantee

BANK GUARANTEE NO.....
DATE OF ISSUE.....
DATE OF EXPIRY.....
AMOUNT.....

Sui Southern gas Company Limited,
ST. 4/B, Block-14,
Gulshan-e-Iqbal,
Sir Shah Suleman Road,
Karachi.

SSGC/LP/.....

Dear Sirs,

In The Sum of Rs.....Account.....
To You in Karachi under the Purchase

In consideration of your having placed Purchase Order No.....
dated..... On M/s..... called Supplier and in consideration for value received from Supplier, we hereby agree and undertake as under:

1. To make unconditional payments to you from time to time as called upon or make an unconditional payments Rs..... Being Ten Percent (10%), of the value of the Purchase Order price mentioned in the said Purchase Ordet, on your written demand(s) without further resource, question or reference to Supplier or any other person, in the event of default or non-performance and / or non-fulfillment by Supplier of his obligations liabilities & responsibilities under and in pursuance of the said Purchase Order of which you shall be the sole judge.

2. To accept written intimation from you as conclusive and sufficient evidence of the existence of a default or breach as aforesaid on the part of Supplier and to make payment accordingly within 3 (three) days of receipt thereof.

3. To keep this guarantee in full force from the date hereof as specified in General or Special terms & conditions.

4. That on grant of time or other indulgence to amendment in the terms of the purchase order by agreement with Supplier in respect of the Performance of his obligations under and in pursuance of the said Purchase Order with or without notice to us, shall in any manner discharge or otherwise, however, affect this Guarantee and our liabilities and commitments there under.

5. This Guarantee shall be binding on us and our successors in interest and shall be irrecoverable.

6. This Guarantee shall not be affected by any change in the constitution of the Guarantor Bank or the constitution of M/s .....the Supplier.

Yours faithfully,

(stamp and signature of the issuing bank)

Sui Southern Gas Co. Ltd. Procurement Dept.

PROCUREMENT REGULATORY AUTHORITY (PRA)

Integrity Pact

DECLARATION OF FEES, COMMISSION AND BROKERAGE ETC. PAYABLE BYTHE SUPPLIERS OF GOODS, SERVICES & WORKS IN CONTRACTS WORTH RS.10.00 MILLION OR MORE

Contract Number: Contract Value: Contract Title:

Dated:

[Name of Supplier] hereby declares that it has not obtained or induced the procurement of any contract, right, interest, privilege or other obligation or benefit from Government of Pakistan or any administrative subdivision or agency thereof or any other entity owned or controlled by it (GoP) through any corrupt business practice.

Without limiting the generality of the foregoing [Name of Supplier] represents and warrants that it has fully declared the brokerage, commission, fee etc. paid or payable to anyone and not given or agreed to give and shall not give or agree to give to anyone within or outside Pakistan either directly or indirectly through any natural or juridical person, including its affiliate, agent, associate, broker, consultant, director, promoter, shareholder, sponsor or subsidiary, any commission, gratification, bribe, finder's fee or kickback, whether described as consultations fee or otherwise, with the object of obtaining or inducing the procurement of a contract, right, interest, privilege or other obligation or benefit in whatsoever form from GoP, except that which has been expressly declared pursuant hereto.

[Name of Supplier] certifies that it has made and will make full disclosure of all agreements and arrangements with all persons in respect of or related to the transaction with GoP and has not taken any action or will not take any action to circumvent the above declaration, representative or warranty.

[Name of Supplier] accepts full responsibility and strict liability for making and false declaration, not making full disclosure, misrepresenting fact or taking any action likely to defeat the purpose of this declaration, representation and warranty. It agrees that any contract, right interest, privilege or other obligation or benefit obtained or procured as aforesaid shall, without prejudice to any other right and remedies available to GoP under any law, contract or other instrument, be voidable at the option of GoP.

Notwithstanding any rights and remedies exercised by GoP in this regard, [Name of Supplier] agrees to indemnify GoP for any loss or damage incurred by it on account of its corrupt business practices and further pay compensation to GoP in an amount equivalent to ten time the sum of any commission, gratification, bribe, finder's fee or kickback given by [Name of Supplier] as aforesaid for the purpose of obtaining or inducing the procurement of any contract, right, interest, privilege or other obligation or benefit in whatsoever form from GoP.

SUI SOUTHERN GAS COMPANY LIMITED

UNDERTAKING OF COMPLIANCE WITH INTEGRATED MANAGEMENT SYSTEM (IMS) MANUAL AND BLACKLISTING MECHANISM

I, _____ [Supplier's Authorized Representative Full Name], of _____ [Supplier Company Name], with principal office located at _____ [Full Address], do hereby solemnly affirm and declare as follows:

1. That I am the duly authorized representative of _____ [Supplier Company Name], and have the legal authority to make this declaration on behalf of the company.
2. That I confirm having accessed, read, and fully understood the **Integrated Management System (IMS) Manual** provided by **Sui Southern Gas Company Limited (SSGC)**, available at the official website: https://www.ssgc.com.pk/web/wp-content/uploads/2025/06/IMS-Manual-1-1.pdf
3. That _____ [Supplier Company Name] agrees to comply fully with all the policies, procedures, and responsibilities outlined in the IMS Manual, and will ensure that all relevant employees, contractors, and agents are made aware of and comply with the same.
4. That _____ [Supplier Company Name] acknowledges that failure to comply with the IMS Manual may result in corrective action, including but not limited to financial penalties as per SSGC policy and suspension or termination of business with Sui Southern Gas Company Limited (SSGC).
5. That the bidder has also read, understood, and accepted the **Blacklisting Mechanism of Sui Southern Gas Company Limited (SSGC)**, available at: https://www.ssgc.com.pk/web/wp-content/uploads/2024/09/blacklisting_mechanism_2024.pdf
6. Any type of violation of the tender terms and non-performance will result in the enforcement of the Blacklisting Mechanism, which will be dealt with in accordance with the Blacklisting Rules/Mechanism.
7. This affidavit is made in good faith and for the purpose of affirming our commitment to health, safety, environmental standards, and compliance with the **Integrated Management System (IMS) Manual** and the **Blacklisting Mechanism** of Sui Southern Gas Company Limited (SSGC), as well as all other applicable policies and procedures of SSGC.

Signed at _____ [City] on this _____ day of _____, *20* .

Signature: _____
Name: _____
Designation: _____
Company Name: _____
Contact Details: _____

(Company Stamp / Seal Mandatory)

Witnessed by:

Signature of Witness: _____
Name of Witness: _____
Date: _____

Signature of Witness: _____
Name of Witness: _____
Date: _____

PUBLIC PROCUREMENT REGULATORY AUTHORITY (PPRA) EPADS

Historical Contract Non-Performance, and Pending Litigation and Litigation History

[The following table shall be filled in for the Applicant and for each member of a Joint Venture]

Applicant's Name: *[insert full name]*
Date: *[insert day, month, year]*
Joint Venture Member Name: *[insert full name]*
IFP No. and title: *[insert IFP number and title]*
Page *[insert page number]* of *[insert total number]* pages

☐ Not debarred due to deviation from commitment of Bid Securing Declaration-☐ Not debarred due to non-performance			
Year	**Non-performed portion of contract**	**Contract Identification**	**Total Contract Amount (current value, currency, exchange rate and PKR equivalent)**
[insert year]	*[insert amount and percentage]*	Contract Identification: *[indicate complete contract name/ number, and any other identification]* Name of Procuring Agency: *[insert full name]* Address of Procuring Agency: *[insert street/city/country]* Reason(s) for nonperformance: *[indicate main reason(s)]*	*[insert amount]*
Pending Litigation, in accordance with Section III, Qualification Criteria and Requirements			
☐ Pending litigation in accordance with Section III, Qualification Criteria and Requirements, Sub-Factor 2.3 as indicated below.			

Year of dispute	**Amount in dispute (currency)**	**Contract Identification**	**Total Contract Amount (currency), ~~US$~~ PKR Equivalent (exchange rate)**

[insert year]	*[insert amount]*	Contract Identification: [indicate complete contract name, number, and any other identification] Name of Procuring Agency: *[insert full name]* Address of Procuring Agency: *[insert street/city/country]* Matter in dispute: *[indicate main issues in dispute]* Party who initiated the dispute: *[indicate "Procuring Agency" or "Supplier"]* Status of dispute: *[Indicate if it is being treated by the Adjudicator, under Arbitration or being dealt with by the Judiciary]*	*[insert amount]*

☐ No consistent history of court/arbitral award decisions in accordance with Section III, Qualification Criteria and Requirements, Sub-Factor 2.4.

☐ Consistent history of court/arbitral award decisions in accordance with Section III, Qualification Criteria and Requirements, Sub-Factor 2.4 as indicated below.

Year of award	**Outcome as percentage of Net Worth**	**Contract Identification**	**Total Contract Amount (currency), PKR Equivalent (exchange rate)**
[insert year]	*[insert percentage]*	Contract Identification: [indicate complete contract name, number, and any other identification] Name of Procuring Agency: *[insert full name]* Address of Procuring Agency: *[insert street/city/country]* Matter in dispute: *[indicate main issues in dispute]* Party who initiated the dispute: *[indicate "Procuring Agency" or "Supplier"]* Court/ arbitral award decision: *[Indicate if the award decision was against the Applicant or any member of a joint venture.]y]*	*[insert amount]*